RB4000
TWO POST LIFT

INSTRUCTION & MAINTENANCE MANUAL

Read this entire manual carefully and completely before installation or operation of the lift

TWO POST LIFT INSTRUCTION MANUAL

Index **Page**

1. Packing, transport and storage

All packing, lifting, handling, transport and unpacking operations are to be performed exclusively by expert personnel.

1.1 Packing

Standard configuration	1＃carton
Power unit and accessories	1pcs

Standard configuration	2＃carton
Main and sub column	1set
Oil hose cover plate	1pcs
Lifting arm	4pcs
Control box	1pcs
Accessory	1pcs

Table 1

1.2 Transport

Packing can be lifted or moved by lift trucks, cranes or bridge cranes. In case of slinging, a second person must always take care of the load, in order to avoid dangerous oscillations.

During loading and unloading operation, goods must be handled by vehicles or ships.
At the arrival of the goods, verify that all items specified in the delivery notes are included. In case of missing parts possible defects or damage may due to transport operations.

If finding missing parts, possible defects or damage due to transport, one should examine damaged cartons according to **<<Accessories Packing List.>>** to verify the condition of damaged goods and missing parts, also the person in charge or the carrier must be immediately informed.

The machine is heavy goods! Don't take manpower load and unload and transporting way into consideration, the safety of working is important.

Furthermore, during loading and unloading operation goods must be handled as shown in the picture. (**Picture 1**)

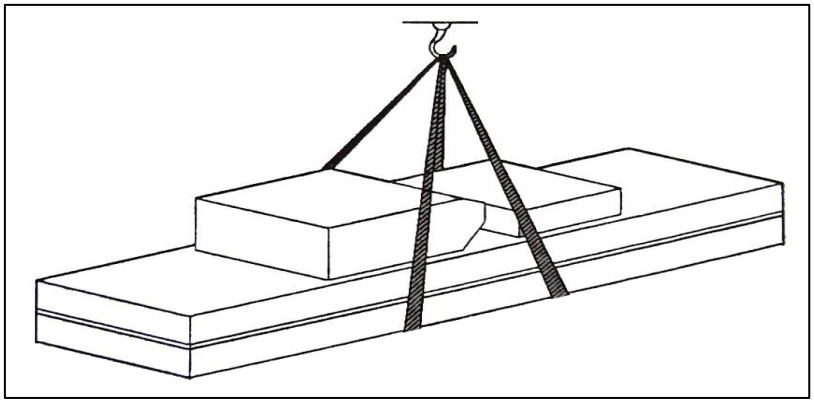

Picture 1 （Goods-lifted）

1.3 Storage

-The machine equipment should be stocked in the warehouse, if stocked outside should do the disposal well of waterproof.

-Use box truck in the process of transport, use container storage when shipping.

-The temperature for machine storage : -25ºC-- 55ºC

2. Manual introduction

This manual has been prepared for workshop personnel expert in the use of the lift operator and technicians responsible for routine maintenance fitter.

Workers should read the **<<Instruction & Maintenance Manual>>** carefully before carrying out any operation with the lift. This manual contains important information regarding:

-The personal safety of operators and maintenance workers.

-Lift safety.

-The safety of lifted vehicles.

Several tips should be done by the operator as follow:

1. Well conserving the manual. Manufacturer owns the right to make little change for the manual owing to the improvement of technology.
2. Good disposal the used oil.
3. The machine must be demolished by authorized technicians, just like for assembling

3. Description of the machine

3.1 Machine Application

Two post lift can lift each kind of vehicle whose weight is less than 4000kg, suitable for use in vehicle tests, maintenance and tyre mounting/demounting.

Lifts are designed and built to lift vehicles and hold them in the elevated position in an enclosed workshop. All other uses of the lifts are unauthorized. In particular, the lifts are not suitable for:

-Washing spray work;

-Use in outdoors;

-Creating lifting personnel;

-Use to lift loose-packed and fractured goods

-Use as elevator;

-Use to lift the titled vehicles.

The manufacturer is not liable for any injury to persons or damage to vehicles and other property caused by the incorrect and unauthorized use of the lifts.

3.2 Structure Features

- Electrical lift oil tube is fully hidden, good-looking appearance.
-The international standard of mechanical safety device and electrical unlocking device are totally united as one.
-Double insurance self-locking protection device, safe and easy operation.
-Using two wire ropes synchronous connection, forcing two slider moving simultaneously, effectively prevent the vehicle tilting
-The lowest lifting height is 110mm, adapted to high-grade car maintenance.
-Equipped with high precision to the lifting arm rotating angle locking device to prevent accidents.
-Heavy loading chain, safe and reliable.

3.3 Equipment

-Machine basement (The position and space of equipment installation)
-Machine frame (The main structure of lift and insurance institution)
-Power unit（Hydraulic control part）
-Control box (Machine-controlled part)

Base structure

-Make of cement concrete structure.

3.4 Frame

-Make of column , lifting arm, and oil hose cover plate.

Power unit

- Make of hydraulic pump、pump motor and oil box.

3.5 Control box

- Under the control box is hydraulic oil tank and hydraulic pump, valve and other control system. On the control box is electrical system.

Function of each valve on the power unit	
Name	Function
Gear pump	Extract hydraulic oil and provide high pressure.
Connecting block	Connect the motor and the gear pump.
Motor	Provide power for the gear pump.
Overflow valve	Adjust oil pressure.
Pressure-compensated valve	Control the speed of falling.
Lowering solenoid valve	Control flow of the hydraulic oil.
One-way valve	Control the one-way flow of hydraulic oil.
Ball valve	Debugging and control the returned oil.

Table 2

4. Specifications

4.1 Main technical parameter

Machine type	4T
Machine weight	616kg
Lifting capacity	4000kg
Machine lift height	1910mm
Platform initial height	110mm
Machine height	2850mm
Machine width	3420mm
Machine lifting time	≤45s
Machine descent time	about 45s
Standard power supply	3/N/PE~380V, 50Hz,10A
Whole machine power	2.2kw
Hydraulic oil	8L corresponds to wearable hydraulic oil
Working temperature	5-40℃
Working humidity	30-95%
Noisy	< 70db
Storage temperature	-25℃~55℃

Table 3

Requirements

-Concrete type 425#, the period of desiccation is 15 days

-Clean the basic layer, thickness of concrete≥150mm, the leveling of whole length≤10mm

Power unit:

Voltage……380V,50Hz

Model……gear pump

Max flux……2.7cc/r

Max working pressure……18Mpa

Hydraulic oil: use N32# hydraulic oil in winter

use N46# hydraulic oil in summer

4.2 External dimension drawing

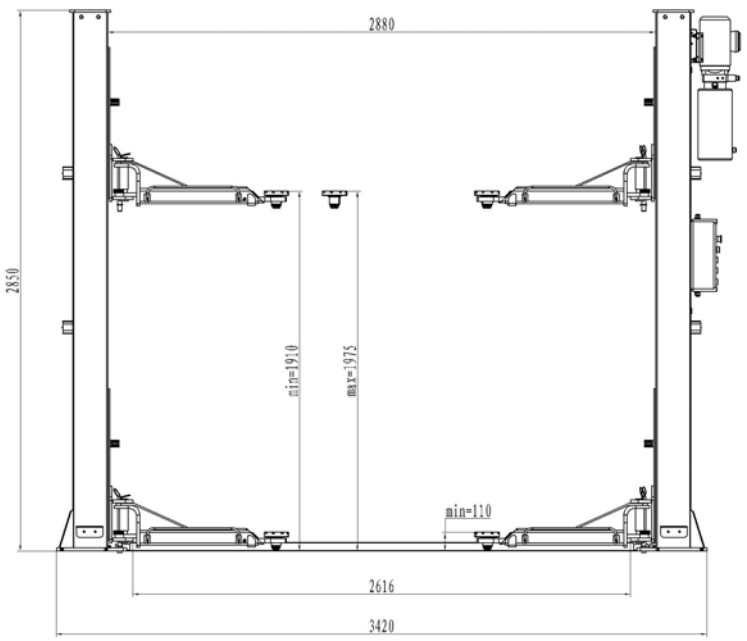

Picture 2 (Lift dimension picture)

4.3 Lifting arm dimension drawing

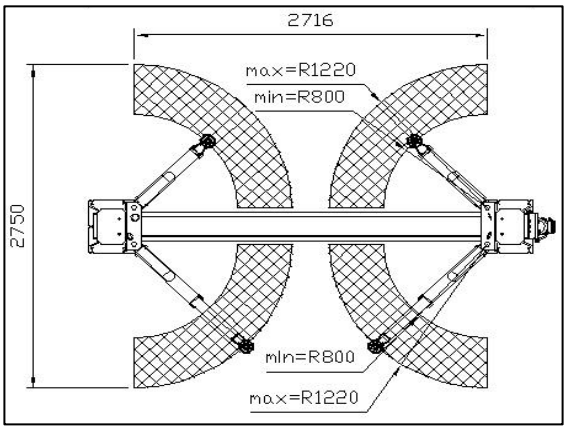

Standard equipment

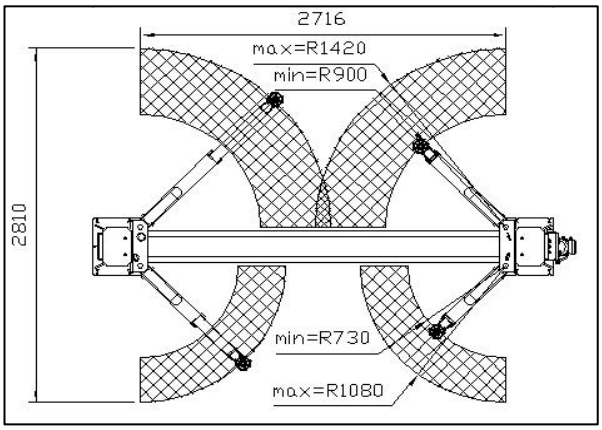

Choosing equipment 1

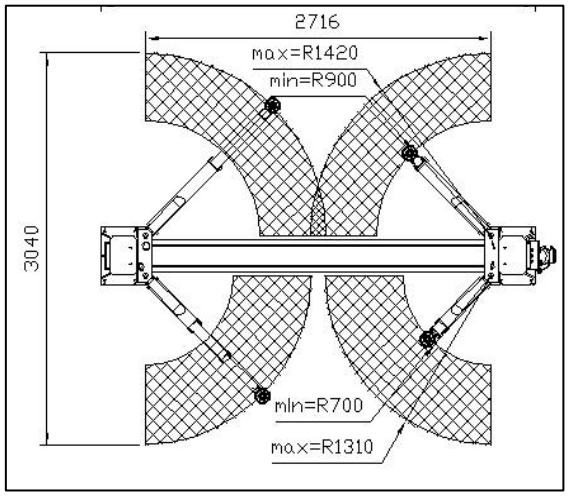

Choosing equipment 2

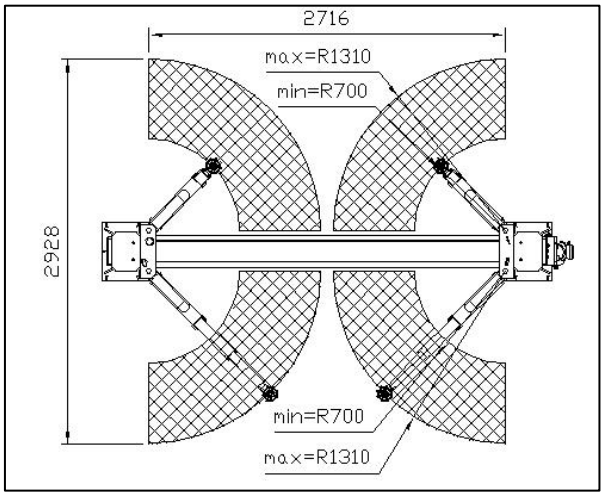

Choosing equipment 3

4.4 Types of vehicles suitable for(For reference only)

This lift is suitable for virtually all vehicles with total weight and with dimensions not exceeding the below data. Maximum weight not exceed than 4000kg

The dimension of vehicle:

The following diagrams illustrate criteria used to define the operating limits of the lift.

- Pay attention to warning signs

-Each kind of automobile differs in centre-of-gravity position. Centre-of-gravity position of automobile shall be understood at first. When automobile enters the lifter, the center of gravity shall get close to plane formed by both vertical columns. The rocker arm shall be adjusted to allow bearing point to be on bearing surface of car.

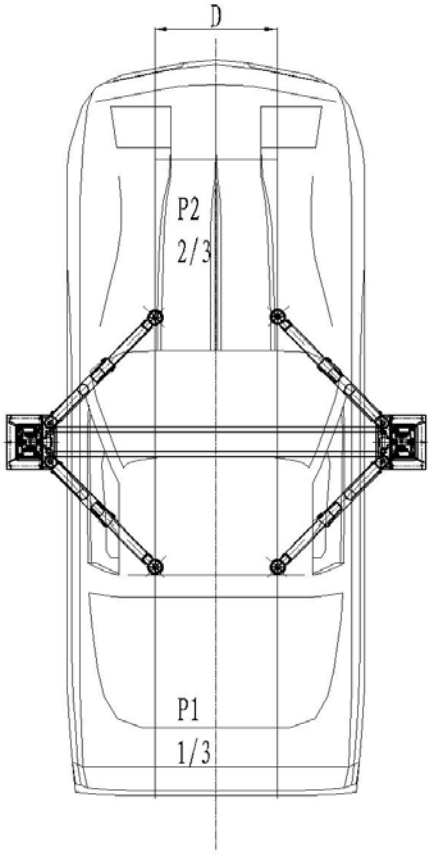

Picture3

Lift	D(mm)	P2(kg)	P1(kg)	C=P1+P2(kg)
3.2T	710	1675	840	2515
	800	1800	900	2700
	900	1920	960	2880
	1000	2140	1060	3200
3.5T	710	1890	940	2830
	800	2020	1010	3030
	900	2160	1080	3240
	1000	2400	1200	3600
4T	710	2100	1040	3140
	800	2250	1120	3370
	900	2400	1200	3600
	1000	2650	1350	4000

Table 4

The centre-of-gravity position of each kind of vehicle is different. First know about the centre-of-gravity of vehicles. Make the centre-of-gravity close to the plane formed by the two columns when the vehicle drive into the lift. Adjust the lifting arm, make the bearing point support the bearing surface of vehicles.

5. Safety notes

5.1 General precautions

Workers should read the **<<Instruction & Maintenance Manual>>** carefully before carrying out any operation with the lift

The manufacturer is not liable for any injury to persons or damage to vehicles and other property caused by the incorrect and unauthorized use of the lifts.

The operator and the maintenance fitter are required to observe the prescriptions of safety regulation in force in the country of installation of the lift.

Furthermore, the operator and maintenance fitter must:

-Always work in the stations specified and illustrated in this manual;

-Never remove or deactivate the guards and mechanical, electrical, or other types of safety devices;

-Read the safety notices placed on the machine and the safety information in this manual.

In the manual all safety notices are shown as follows:

Warning: indicates following operations that are unsafe and can cause minor injury to persons and damage the lift, the vehicle or other property.

Risk of electric shock: a specific safety notice placed on the lift in areas where the risk of electric shock is particularly high.

5.2 protection devices

The safety protection devices use to protect the operator in case of overload or machinery failure:

-In the case of overload, the overflow valve of the pump will open, the hydraulic oil will return to the oil tank.

-The mechanical insurance works automatically to prevent the carriage from falling off when the oil cylinder loose pressure.

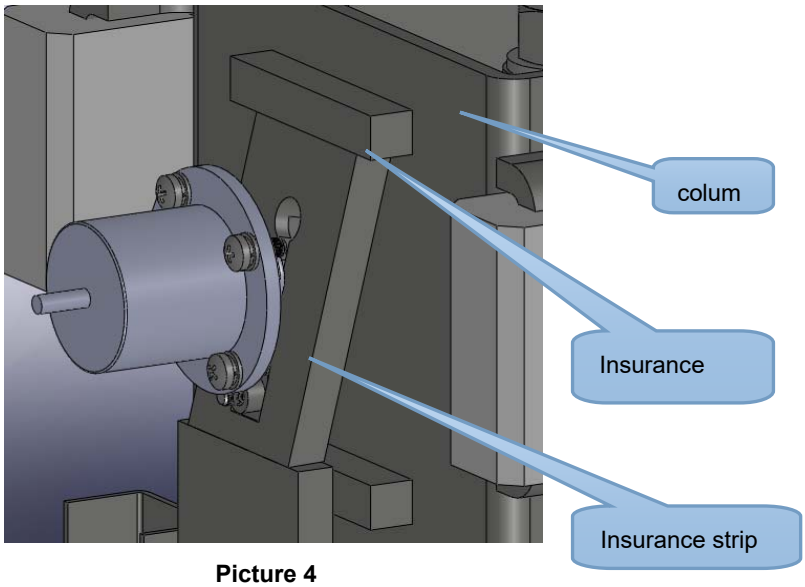

Picture 4

-Operators will hear the sound when the insurance claw falls on the insurance strip in the case of normal use. If not, this machine is prohibited to use. Operator can check the insurance device by opening the decorated box. If the insurance device is blocked, adjust the screw on the insurance claw till the sound can be heard when the insurance claw falls on the insurance strip.

-Only press "LOCK" button after the machine is lifted, vehicle maintenance can be permitted.

-If the two carriages are not in the same plane, adjust the nut on steel cable to keep them in the same plane. Tighten the steel cable, or the two carriages can not be synchronous.

-Locking devices are installed in each lifting arm, it can lock automatically when lifting arm rotate to any needed angle. When the carriage in the lowest position, the lifting arm can rotates freely. In order to prevent the lifting tray from falling, we adopt the adjustable thread lifting tray to make it more safe and convenient

Risk for extrusion

During up and down operations, personnel leave the said area without following the rule and instruction.

During up and down operations, no person is admitted to work beneath the movable parts of the lift, should work in the safe zone.

Risk of impact

Before the operator begins up and down movements, make sure that there are no personnel inside the danger zone. When, due to operational reasons, the lift is stopped at relatively low elevations (lower than 1.75m above the ground) personnel must be careful to avoid impact with parts of the machine not marked with special colors.

Risk of falling (vehicle)

This hazard may arise in the case of incorrect positioning of the vehicle on the lifting arms, overweight of the vehicle, or in the case of vehicles of dimensions that are not compatible with the capacity of the lift.

When the lifting arm is being tested, the vehicle engine can not be turned on.

There is nothing should be placed on the lift-lowering area and the movable parts of the lift.

Risk of slipping

The floor caused by lubricant contamination of around the lift. The area beneath and immediately surrounding the lift and also the platforms must be kept clean. Remove any oil spills immediately.(**Picture 14**)

Risk of electric shock

Risk of electric shock in areas of insulated and shattered electric equipments

Do not use jets of water, steam solvents or paint next to the lift, and take special care to keep such substances clear of the electrical control panel.

Risks related to appropriate lighting

The operator and the maintenance fitter must be able to assure that all the areas of the lift are properly and uniformly illuminate compliance with the laws in force in the place of installation.

During up and down operations, the operator should continually observe the lift and can operate it only in the position of operator. When lifting and lowering the vehicle, the cushion needs being put in the bottom of chassis.

The handling of safety devices is strictly forbidden. Never exceed the maximum carrying capacity of the lift, make sure the vehicles to be lifted have no load.

6. Machine structure and drive principle

6.1 machine structure：

-This machine is made of column, carriage, lifting arm, spindle parts, safety lock device, oil cylinder, power unit, oil hose, control box and electric wire. mechanical lock and hydraulic lock double safety device ensure its security.

Instruction of each part

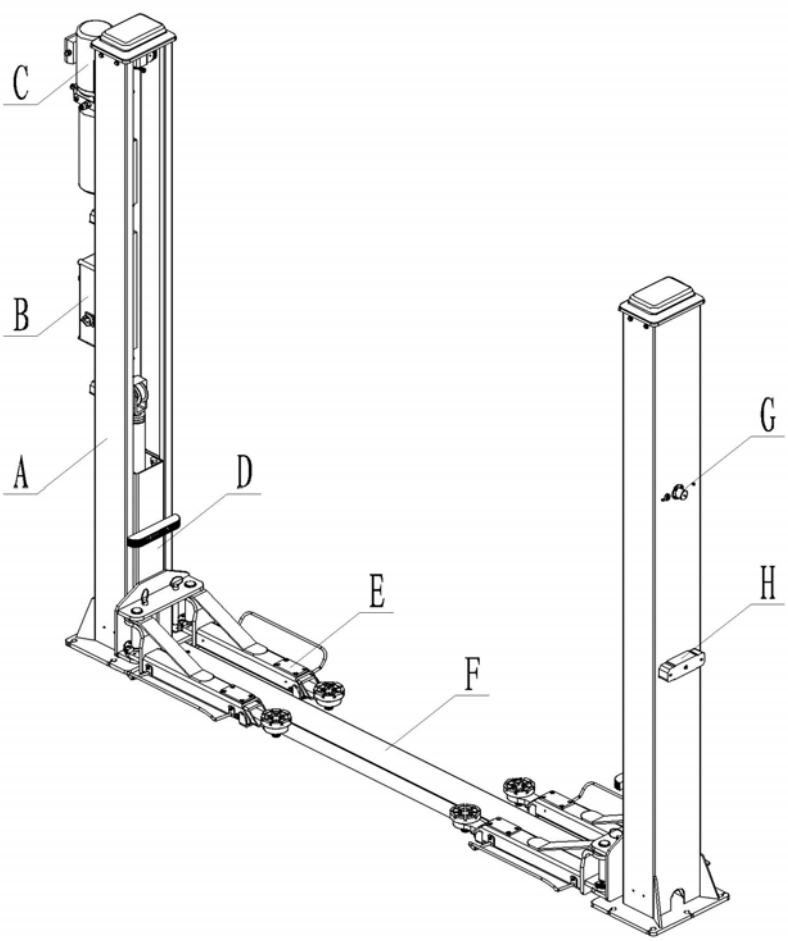

A	Column
B	Control box
C	Power unit
D	Carriage
E	Lifting arm
F	Oil hose cover plate
G	safety lock device
H	Decorate box

Table 5

6.2 Drive principle：

-Press button "UP", the contactor and motor work. Motor drives the gear pump, the hydraulic oil goes through the one-way valve, oil hose finally reach the in the downward cavity of oil cylinder. The piston rod is pushed by the oil pressure. The oil cylinder drives the lifting arm synchronously with the steel cable and roller wheel and chain.

. When do the vehicle maintenance, operators press the "LOCK" button, the lower solenoid valve works and the electromagnets do not work when the carriages is locked. When lower the lift, press the "DOWN" button, the time relay works, the lift raises for 2-3 seconds and lower solenoid valve works at the same time. The weight of vehicle and lift extrude the hydraulic oil into the oil tank. Finish the lowering operation.

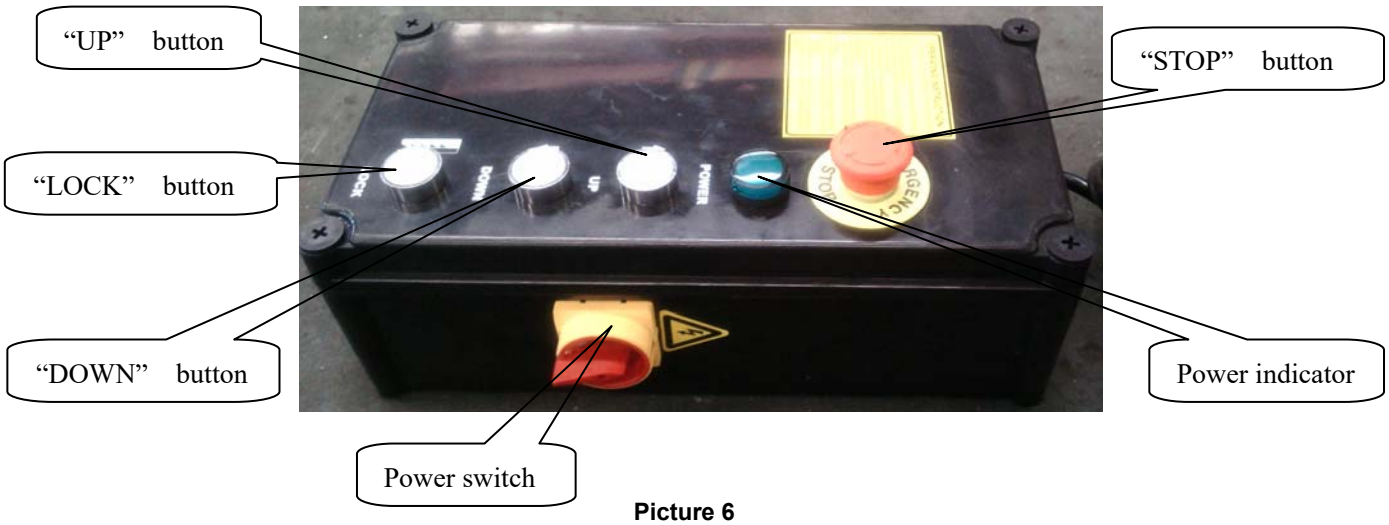

Picture 6

7. Installation

7.1 Installation requirement

-Two post lift must keep install under the safe distance requirement from the wall, column and other equipment. Minim distance from wall is 800mm, consider the urgency situation and convenience work, the distance of exit passageway should considered having enough rooms.

Please make sure there is power supply for the control unit.

The indoor height should not be less than 3150mm.

Indoor ground is available for installation, only the ground level meets the installation requirement and have enough endurance capacity (concrete intensity must be higher than 21MPa, concrete thickness must reach 300mm and above), otherwise, please pour concrete 1200 * 4000mm in installation space, thickness must reach 300mm and above.

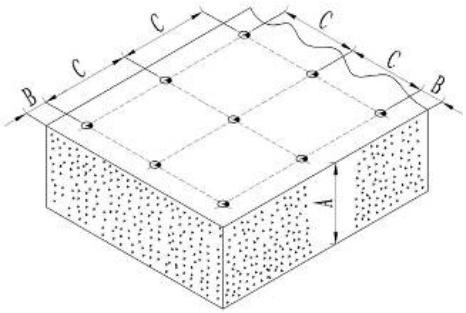

Picture 7

A	Concrete thickness must reach 300mm and above
B	Side- hole to the concrete edge must reach 150mm
C	Machine baseboard installation distance

Table 6

Make sure there is enough and gentle light when install the machine, to ensure a safe work and machine adjustment, do not provide strong light and get eyestrain.

7.2 Base requirement

Concrete type: 425#, drying period ≥7 days.

Clean the raw surface, concrete thickness ≥300mm，ground level degree≤5 mm

Power supply for control unit (380V or 220V15A)

Foundation drawing

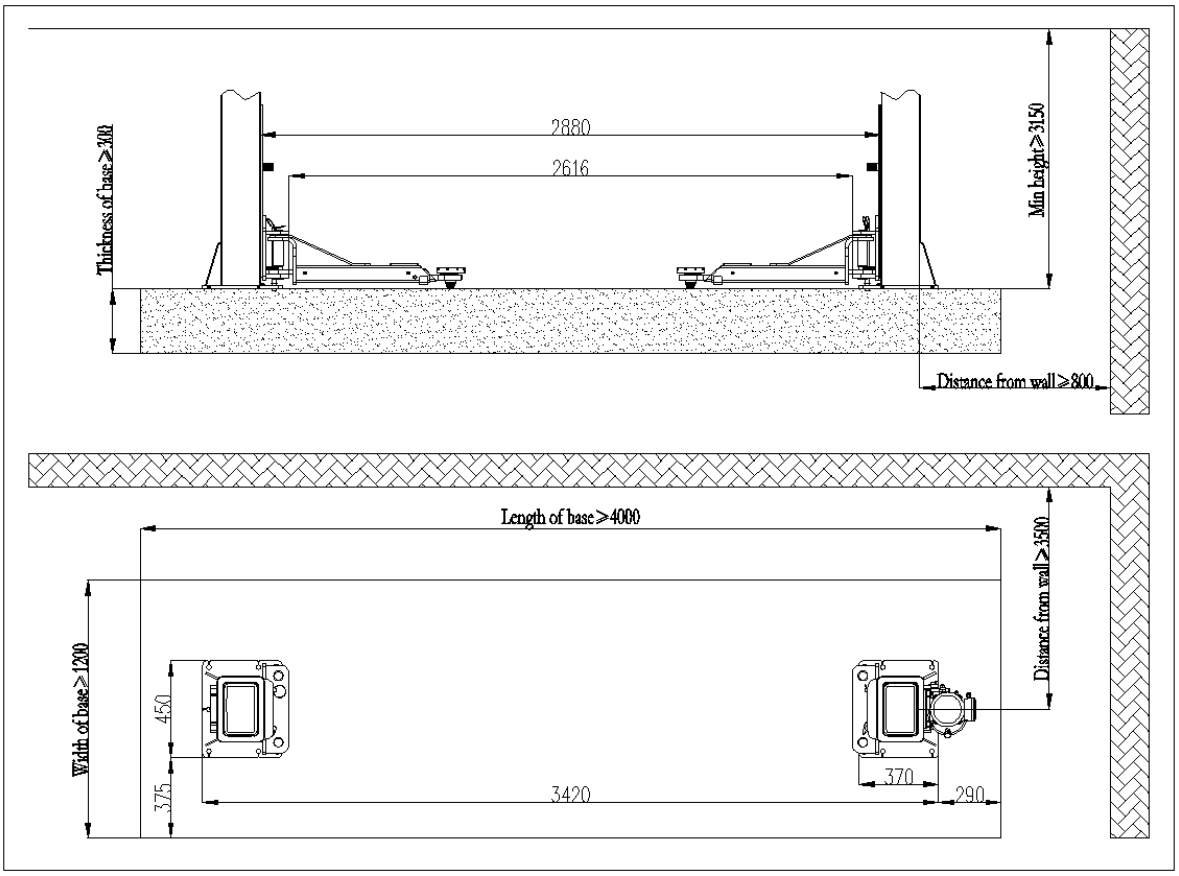

Picture 8

Only the trained and qualified technician is allowed to install the machine, please careful read and follow below instruction before installation, in order to avoid any damage or personal safety.

Examination before installation

Foundation drying period and concrete strength must meet the requirement.

Completeness of the machine (refer to the "packing list")

Power supply connects with the control unit.

Hydraulic oil is qualified

7.3 Installation

Column installation

a. Set up the column

set up the installed main and sub columns on the concrete foundation, with distance at 2680mm which is suitable to install the oil hose cover plate, make sure the two columns are in same level.(refer below picture).

b. Install the expansion bolt

The expansion bolt must work after finished the maintenance of the concrete foundation, otherwise, it will affect the locking quality.

-Adjust the position & vertical degree of the two columns.

-Use a hammer clip with φ18mm impact bit(the length of the bit ≥180mm)drill the hole from the base plate hole till depth 160MM, and clean the hole with dust cleaner

- Use the light hammer to knock the expansion bolts to the 10 holes (no need to insert the center expansion nail, fix it after finished the level adjustment)

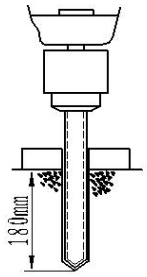

Picture 9

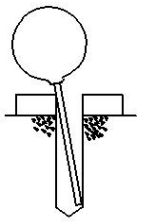

picture 10

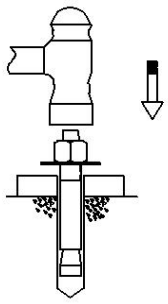

picture 11

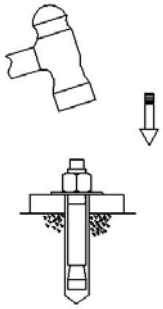

Picture 12

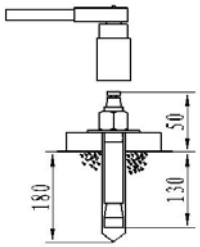

picture 13

c. Level adjustment

- Use a transparent horizontal tube or gradienter to exam the all around level of the master & vice column, if level degree is no problem, insert the center expansion nail, heavy hammer knocks the center expansion nail, tighten the nuts after finished to install the top beam and the master & vice column is still in level degree.

⚠ **If the concrete foundation is under the maintenance, please do not knock in the center expansion bolt. The space between the base plate and ground must fill with cement mortar after adjust the level degree**.

Steel cable installation.

- After pull the synchronous steel cable 1 (that draw from the lifting carriage of main vertical column) pass the bottom of column steel cable pulley roller B, through the bottom of sub column steel cable pulley roller B,,upward through the sub column top beam pulley roller A , then fix the steel cable by M16 nut in the hole of the fixed plate E ,which on the carriage of deputy vertical column. Similarly to draw the steel cable 2 from the lifting carriage of deputy vertical column , and fixed it in the hole of the fixed plate E , which on the main vertical column carriage.

-Check the left carriage and the right carriage, watch if they are at the same height. If not, please loose the nut that located on the hole of fixed plate C, which on the main vertical column. And then make the carriage of main vertical column drop down. Or tighten up the nut that located on the hole of fixed plate C, which on the deputy vertical column. And then make the deputy vertical column lift up. Similarly, when the carriage of main vertical column is lower than the one of deputy vertical column, reversed adjustment

The adjustment is required to both reach to the same height, two carriage (left and right) must be in the same height, the steel cable must be tighten up, not allow any loose, moreover, the steel cable must be inside the skating slot of steel cable roller, parallel to each other, not allow any cross, otherwise, two carriages can't have synchronization effect. Please as per following photo:

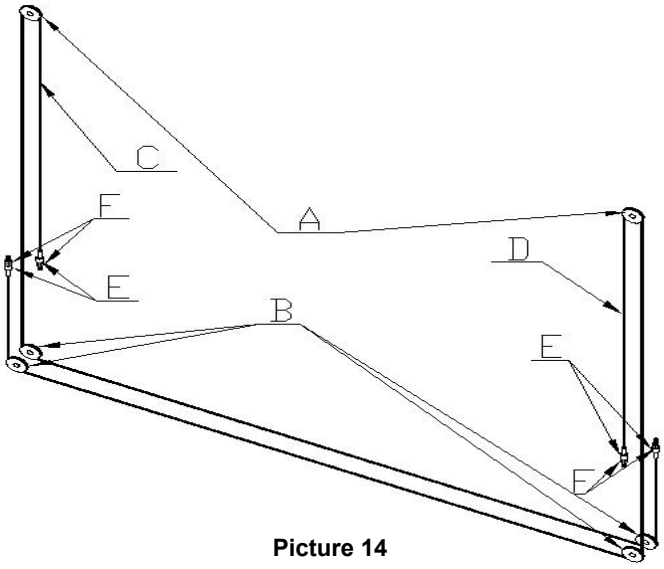

Picture 14

A	Top beam pulley
B	Base plate pulley
C	Steel cable 1
D	Steel cable 2
E	Wire rope boom seat post
F	M16 nut

Install the complete insurance device assembly

- Install the insurance electromagnet assembly on the column.
- Insurance block set on the electromagnet assembly on the inside of column.

A	column
B	Electromagnet
C	Φ5 flat washer
D	Φ5 spring washer
E	M5×12 cross pan head screw

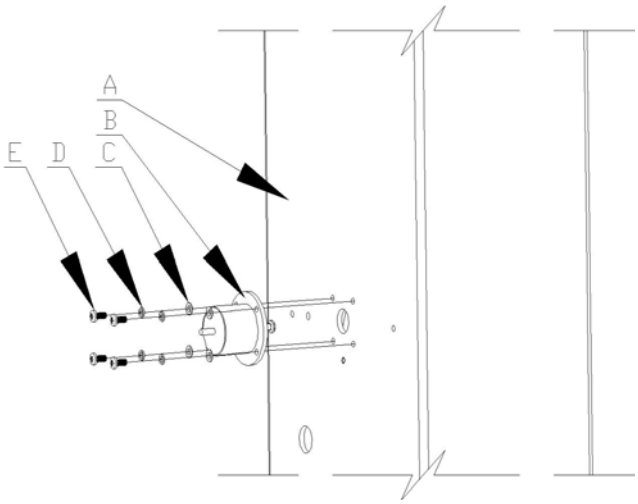

Picture 15

Blocking insurance installation schematic

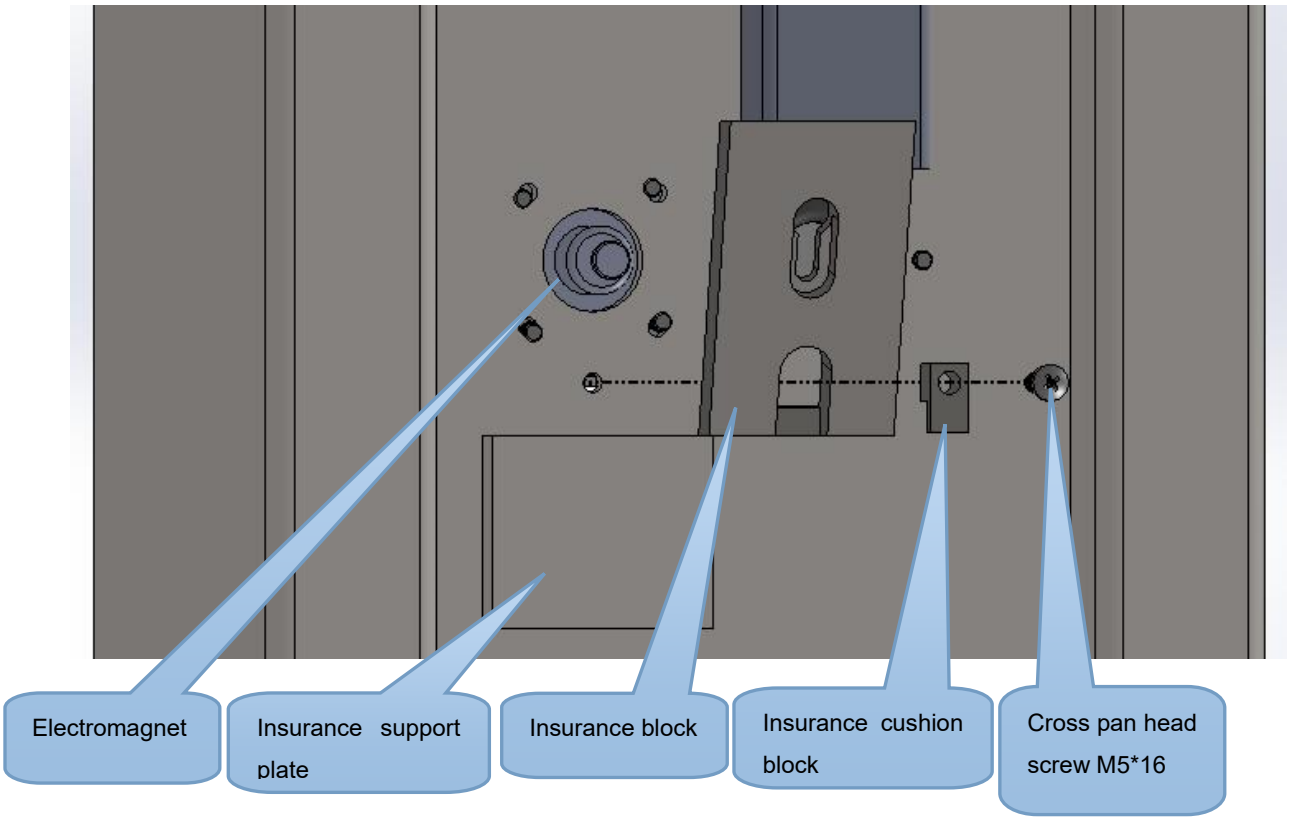

Picture 16

Test the flexibility of insurance device after installation, any phenomenon of blocking insurance device is not allowed

Install the power unit.

-Install the two bolts on the power unit, do not locking, there should be a certain gap

-Then installing the power unit from the motor hanging hole D to the main column

-Install the two remaining bolts from the holes of power unit

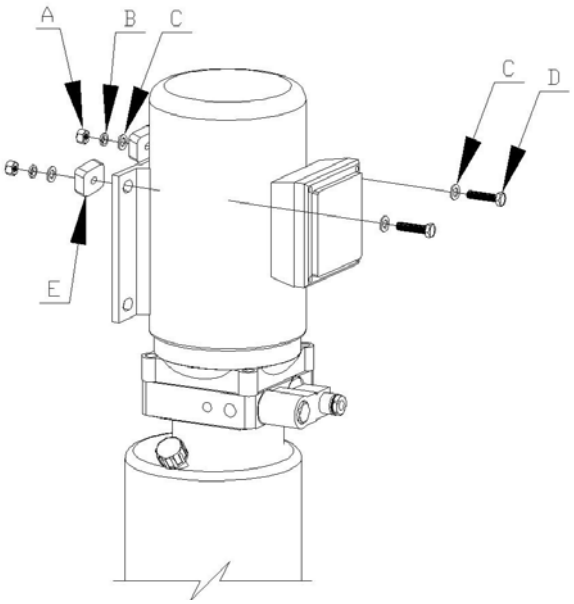

A	φ8 nuts
B	φ8 spring washer
C	φ8 flat washer
D	M8×45 full thread hex flanges bolt
E	motor cushion

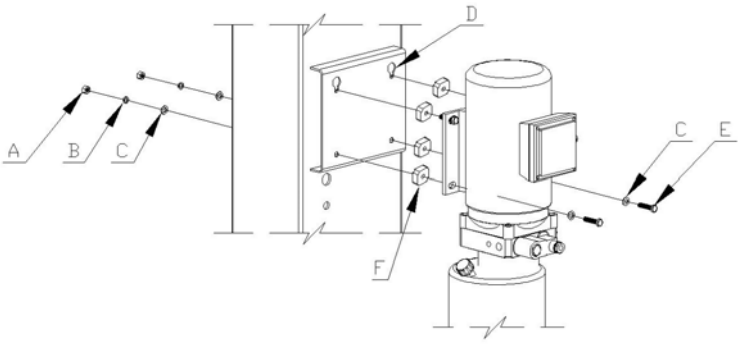

A	φ8 nuts
B	φ8 spring washer
C	φ8 flat washer
D	Motor hanging hole
E	M8×45 full thread hex flanges bolt
F	motor cushion

Picture 17

Lifting bracket arm installation

-Two post lift equips symmetric arm, which are installed on the main carriage and sub carriage.

Bracket arm installation steps:

-First, take down the semi-circle block and arm bolt which installed on the lifting bracket, put aside.

-Then, install the lifting bracket arm B on the carriage's support lug, insert arm bolt A , make the downside slot of both arm bolt and arm support lug just on the same level. Please as per below photo:

A	Arm bolt
B	Lifting bracket arm

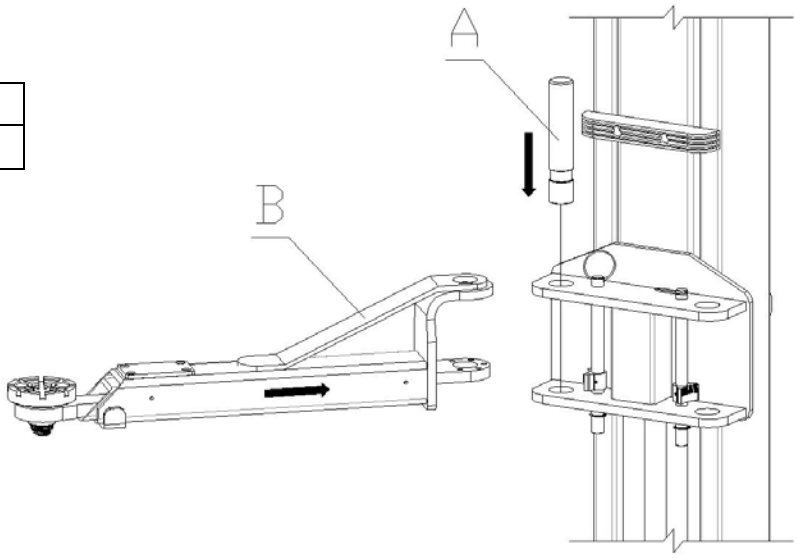

Picture 18

Aligning the hole, arm bolt needs vertical align with the hole to install

A	Bracket arm bolt
B	Long bracket arm

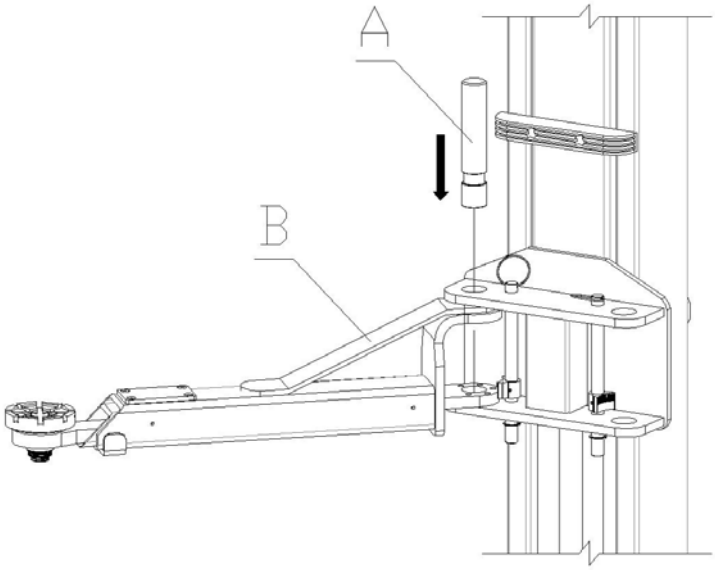

Picture 19

There are five mounting holes in the downside arm support lug, it can adjust semi-circle block and teeth block meshing well

And then, put into the semi-circle block , semi-circle block bottom B should joint with the downside arm support lug C, make the semi-circle block just into the slot of bracket arm bolt, align all holes, tightened and locked by M10×25 inner six angle cylinder head screws, please as per below photo

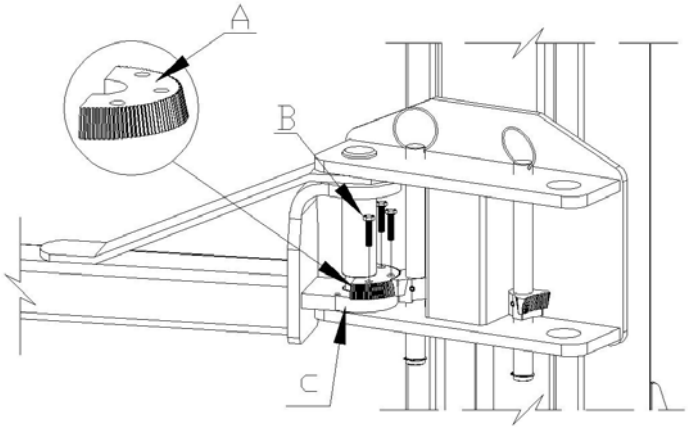

A	Semi-circle block
B	M10×25 inner six angle cylinder head screws
C	Downside arm support lug

Picture 20

Lifting arm assembly diagram

A	Lifting bracket arm

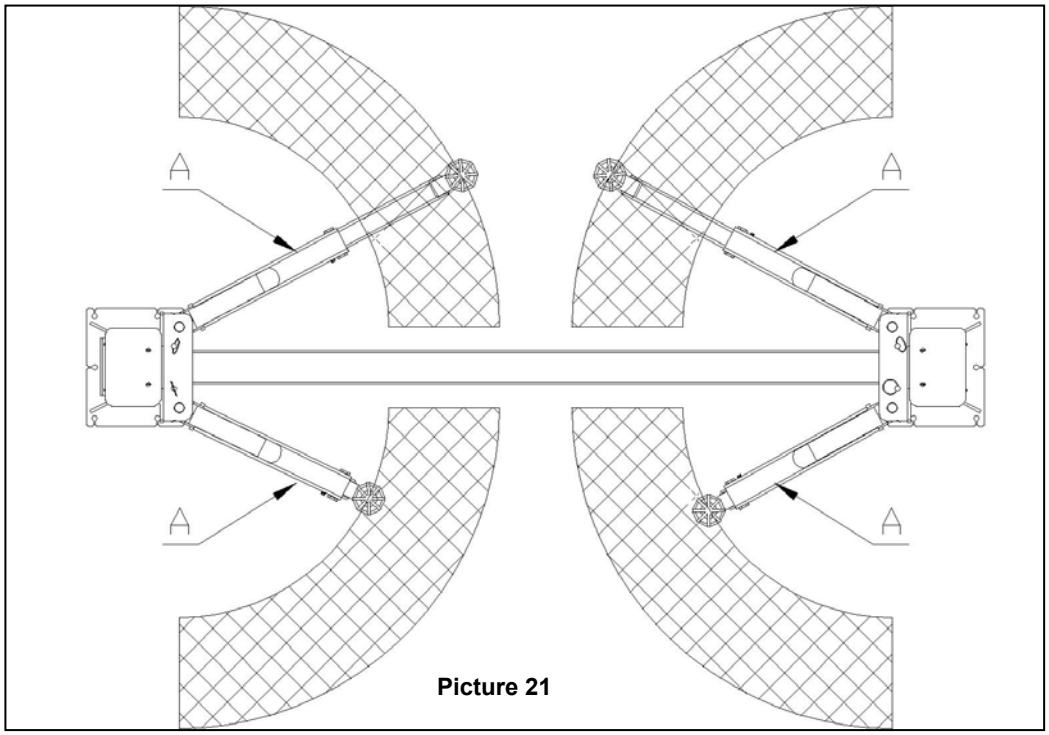

Picture 21

Hydraulic oil hose clamp installation

Hydraulic connection:

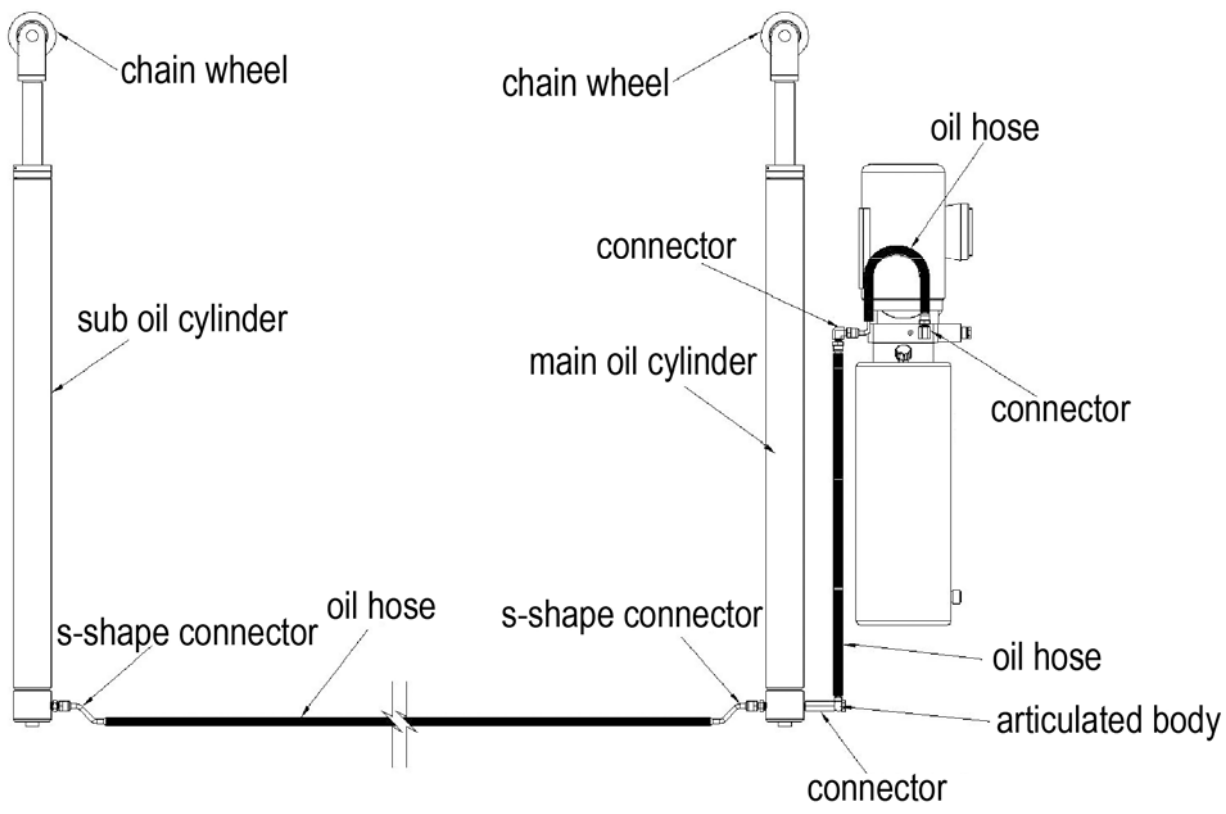

Picture 22

Oil hose clamp installation schematic diagram

Only the trained and qualified technician is allowed to install the machine,

Please pay more attention oil hose clamp connection protection, in order to prevent foreign body into the oil tube failure.

- High pressure tubing from the pump outlet connected to the 90 ° bend clapboard connector(Please refer to above hydraulic connection)
- High pressure tubing from the 90 ° bent bulkhead connector from the hose connector on the master cylinder
- Finally main oil cylinder with sub oil cylinder connect the high pressure oil tube
-Tightening the oil connector, to avoid it oil leaking
- When connecting tubing, attention to the oil connector protection, prevents foreign bodies from entering the hydraulic circuit

7.4 Electrical Circuit Connection:

Electrical circuit should be connected in accordance with the wire diameters and line numbers specified in the Electrical Wiring Diagram.

Only electrical professionals are qualified in the operation of electrical installation work.

- As per the wire diameters and line numbers specified in the Electrical Schematic Diagram, connect the electrical circuit.

-Make sure the power switch is off and hang the warning sign "DON'T TURN ON THE POWER".
-For 380V, wire the 4×2.5mm^2 cable of the control box to the power input terminals.
-For 220V, wire the 3 × 2.5mm^2 cable to the power input terminals.
-Connect bicolor ground wire to the grounding bolt.
-**Circuit connection for safety electromagnet:** Insurance electromagnets mounted on the column, wires from the slot through 4 insurance in electric magnet in parallel connected to the control box Terminal
-**Circuit connection for limit switch:** The limit switches are installed the top of the main column, wires from the slots on the cross on the control box Terminal
- **Decreased solenoid valve coil connection:** Decreased power unit solenoid valve coil wires from the column slot through terminals in the control box

8. Commissioning

8.1 Fill hydraulic oil

After the hydraulic and electric circuits have been connected as instructed, operate as per the below steps:
-Fill 12L wear-resistant hydraulic oil N32 or N46 (supplied by the user) into the oil tank.

Before filling, ensure the hydraulic oil is clean, in order to prevent any impurities from entering the oil-way and causing it unsmooth.

8.2 Commissioning

Check Phase Sequence：

-Turn on the power switch on the control box and the power indicator lights. Press the UP button to see if the lifting slipways go up or not. If not up, cut off the power and adjust the power phase sequence to enable the oil pump to supply oil normally. Then check if the joints between the oil pipe and the oil cylinder leaks oil or not. If yes, check if the joints loosen or not.

After the power is turned on, there is a possibility of high voltage electric shock in the control box. Thus this operation should be engaged by authorized professionals with qualifications and experience in electric operation, to avoid the risk of electric shock.

No-load Test：

- Press the UP button SB1, and observe if the main and auxiliary carriages are in the same height or not, while the lift carriages and arms are rising. At the same time, listen to the safety block's sound and judge the position of slipways is high or low. Readjust the steel cable correctly to make the safety blocks' position in the same height. That is, the main and auxiliary slipways are in the same height.
- Press the DOWN button SB2. The oil pump works, the carriages rise first, the time relay is electrified, the mechanical lock and the drop solenoid valve open in 2-3 minutes, and the hydraulic oil inside the oil cylinder is pressed back to the oil tank by the weight of working table. Then the decline completed.
- Press the LOCK button SB3. The drop solenoid valve is electrified, and the mechanical lock is not energized. Then the slipways decline and the mechanical lock reset under the mechanical spring force to lock the slipways. The Locking completed and next operation can start safely.

During no-load test, observe if the host lifting is stable or not, the mechanical lock is properly placed or not, and the oil-way leaks oil or not.

Load test:

-lubricating grease shall be applied to each lubricating point and surface. In addition, the inspection on whether oil leakage phenomenon exists in oil-way or whether the foot margin assembly is fasten. After the above is normal, the load test can be carried out.

-Drive the vehicle that weighs within its outmost lifting capacity between two posts, persons shall not approach the vehicle, put pads on lifter arm.

-Press UP button SB1, rise the carriage, observer whether the vehicle rise steady or not.

- Press DOWN button SB2,observer whether the vehicle lower steady and smooth or not.

-Check whether the rack and pump station got abnormal noise or not, press LOCK button SB3, observer the insurance assembly works well or not.

Make sure the safety lock of the lift is engaged before start working under the vehicle and no people under the vehicle during lifting and lowering process.

The testing vehicle weight can not exceed the maximum weight of the lifting capacity.

Check whether oil leakage phenomenon exists, stop using the machine when find abnormal situation, test the machine after trouble is shot.

After load test, the length of steel cable will be slightly extended. Thus, the leveling shall be carried out once again. The machine can be put into use after step 7.3.2 is repeated.

9. Operation

Only these qualified people, who have been properly trained, can operate the lift.

Please inspect the machine according to the following cautions before operating the machine.

9.1 Pre-commissioning:

-The barriers around lifter and people inside of vehicle shall be removed before work.

-Observer whether the two carriage up-and-down smooth and synchronization or not;

-Whether the machine's insurance claw works flexible and reliable or not;

-Whether the oil tank, oil pipe, connector leaks or not;

-Whether the running sound of motor, pump is normal or not.

-The weight of vehicle capacity can never be beyond lift capacity of the lifter.

9.2 Operating process:

-Drive the vehicle that weighs within its outmost lifting capacity between two posts, speed should be kept in 5 km/h.

-Stop the car, the manual brake of car shall be well pulled, adjust the arm and pad, make sure the supporting point support the surface supporting of the vehicle.

-Press UP button, lift the vehicle 200~250MM upper from the ground, check whether two carriage are synchronous and if there is other abnormal situation or not.

-Continue pressing UP button, lift the vehicle to the desired height

-Observer whether the two carriage are synchronous or not, and if there is other abnormal situation, stop using the lifter, reuse it after trouble is shot

-It's required to "LOCK" the machine when care and maintenance the lifter, and make sure the two carriage are locked at same height, the vehicle maintenance can be carried out after the lifter is locked.

-Before lowering the lifter, observer whether there are foreign matter or person around lifter, carriage or inside of vehicle or not.

-Press DOWN button, time relay electrified, the mechanical lock and decline solenoid valve open 2~3 seconds later, then the carriage is lowering. when insurance claw trip out from the hole of insurance rack, otherwise the lifter can not descend.

- Lower the carriage to its lowest position and do remember to cut off the power source when service finishes.

9.3 Electrical operation instructions:

Lift raising

-Press UP button SB1, motor drives the gear pump work, cylinder piston drives the platform move up, the carriage is raised

-Loosen SB1, the cylinder stop working and carriage stop rising.

Lift lowering:

- Press DOWN button SB2, oil pump work and carriage rise at first, time relay electrified, the mechanical lock and decline solenoid valve open 2~3 seconds later, then the carriage is lowering.

-Loosen SB2, the mechanical lock and decline solenoid valve are shut off, the carriage stop lowering.

Lift locking：

- Press LOCK button SB3, the carriage is lowering, when insurance claw fall over to hole of insurance rack, the carriage stop lowering and locked.

10. Maintenance and care

Skilled personnel only is allowed to perform the operations
Daily checking items:

The user must perform daily check. Daily check of safety system is very important – the discovery of device failure before action could save your time and prevent you from great loss, injury or casualty.

·Always wipe clean, keep the machine clean.

·Clear barriers and ground oil, keep the working condition clean.

·Check the integrity of each safety devices, ensure the motion is flexible and reliable.

·Check the reliability of limit switch motion.

·Check whether oil/air leakage of the machine exist.

Weekly checking items

·All bearings and hinges on this machine must be lubricated once a week by using an oiler

·Check the working conditions of safety parts.

·Check the amount of oil left in the oil tank. Oil is enough if the carriage can be raised to highest position. Otherwise, oil is insufficient.

·Check whether the expansion bolts well anchored.

Monthly checking items

·The safety gear, the upper and lower sliding blocks and other movable parts must be lubricated one month.

·Check whether the foundation bolts well anchored.

·Check the abrasion and leakage of oil/air hose.

Yearly checking items

·The hydraulic oil must be replaced one time each year. The oil level should always be kept at upper limit position.

·.Check abrasion and damage of all the active parts.

·.Check the lubrication of roller. Lubricate it if drag phenomenon exist.

The machine should be lower to the lowest position when replace hydraulic oil, then let the old oil out, and should be filtering the hydraulic oil.

-Each team checks the agility and reliability of pneumatic safety equipment.

Storage after use

When the machine does not use for a long time:

·.Cut off the power supply and air source.

·.Lubricate all the active parts.

·.Drain the hydraulic oil of oil cylinder, oil hose and oil tank.

·Sheathe the machine with dust-proof cover.

11. Trouble shooting table

Skilled personnel only is allowed to perform the operations

Failure Phenomena	Cause and Phenomena	Resolutions
The motor does not run in lifting operation.	①Power supply is abnormal	Check and correct wire connection
	②There is a short in the AC contactor in the circuit	Check the wire of AC contactor
	③The limit switch is broken	Check the limit switch, wires and adjust or replace the limit switch.
The motor has noise but can not run	Motor phase loss	Stop run the motor and check the wire
In lifting operation, the motor runs, but there is no lifting movement.	①The motor turns reverse.	Change the phases of the power supply wires.
	② The amount of hydraulic oil is not enough.	Add hydraulic oil.
	③There is some air in the pump due to the transport, causing the air block-up	Dismount the one-way valve and raise the lift a little(pay attention to the oil). Mount the one-way valve if the oil outflow from the hole.
	④ Pressure-compensated valve is out of order	Check the valve element and seal rings of pressure-compensated valve , clean the valve element and replace the seal rings
	⑤Some block in the valve element of oil return solenoid valve	Clean the valve element
	⑥Seal rings in the oil pump outlet are damaged	Demount the gear pump and replace the seal rings
	⑦Motor runs heavily. Out net of oil filter blocks seriously	Clean the oil filter
The lift raises slowly	Seal rings in the oil pump outlet are damaged	Demount the gear pump and replace the seal rings
The lift trembles in the lifting operation	①There is some air in the oil hydraulic circuit	Raise the lift up and down to exhaust the air
	②Air leakage on the upper connector of absorbing oil hose	Check the absorbing oil hose of oil pump
	③The oil filter blocks	Clean the oil filter
The lift can raise but can not fall	①The button is out of order	Replace with hydraulic oil in accordance with the instruction book.
	②The insurance claw is not divorced from the insurance plate	Check the electromagnet, replace it if it is damaged. If not, adjust the insurance to make it normal

12. Oil hose connection diagram

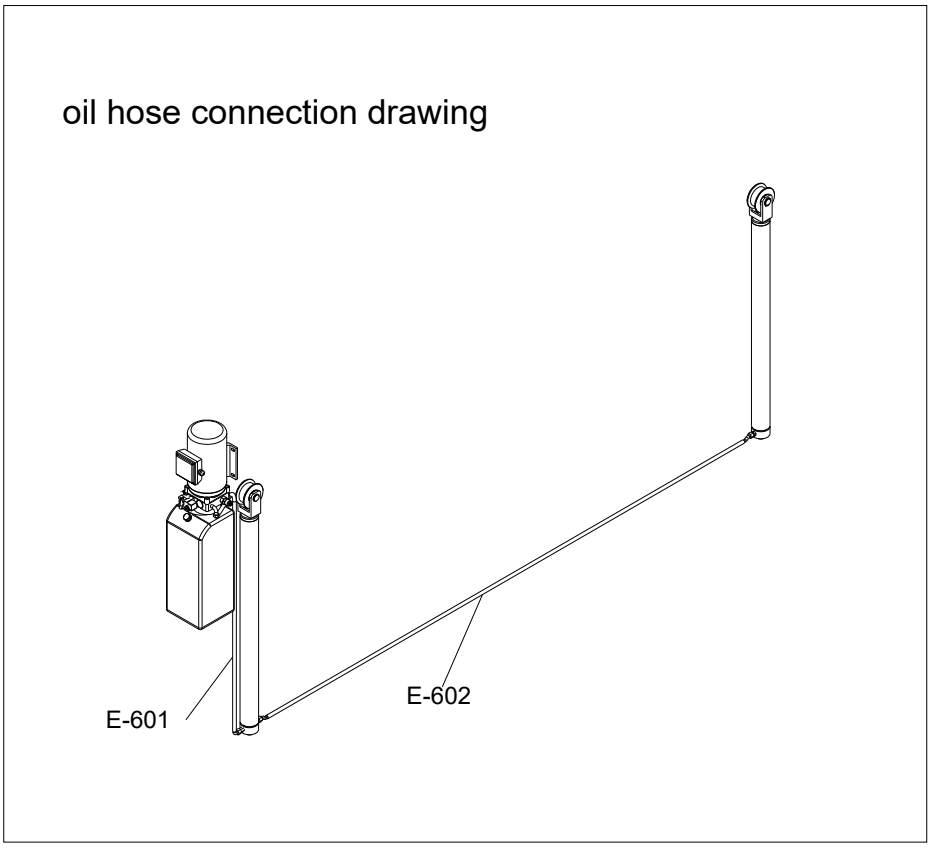

13. Steel cable connection diagram

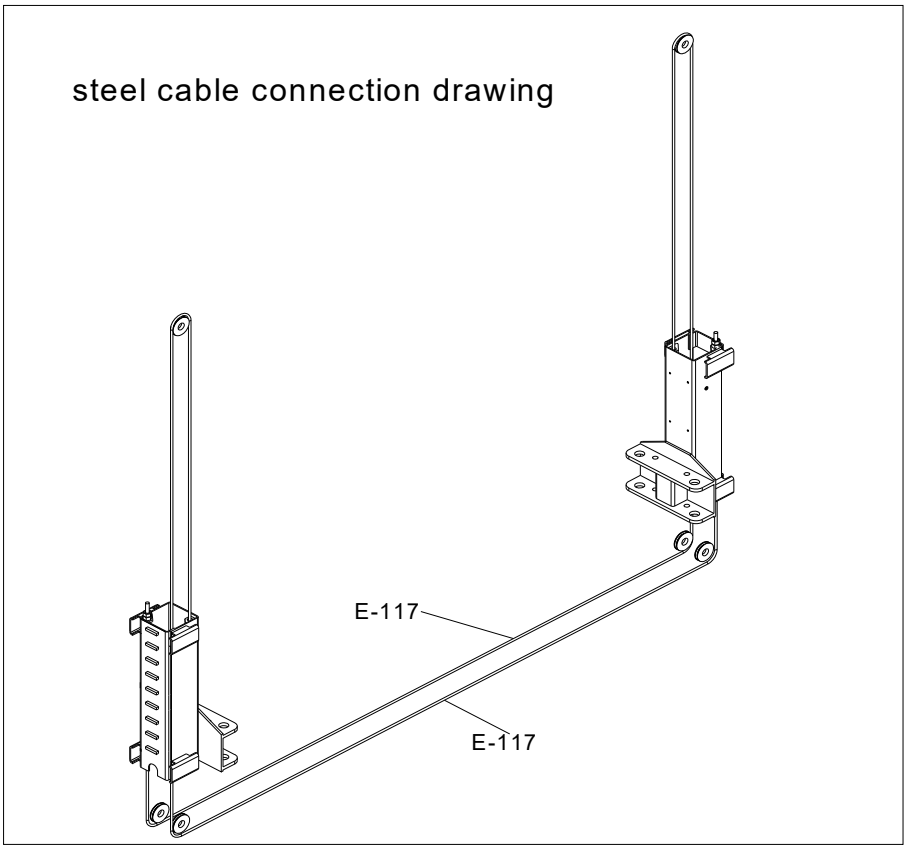

14. Explosion drawing

T40E	
A	Column
B	Carriage
C	Lifting arm
D	Baseplate
E	Main oil cylinder
F	Sub oil cylinder
G	Wire rope
H	Oil pipes
I	Power unit
J	Control box

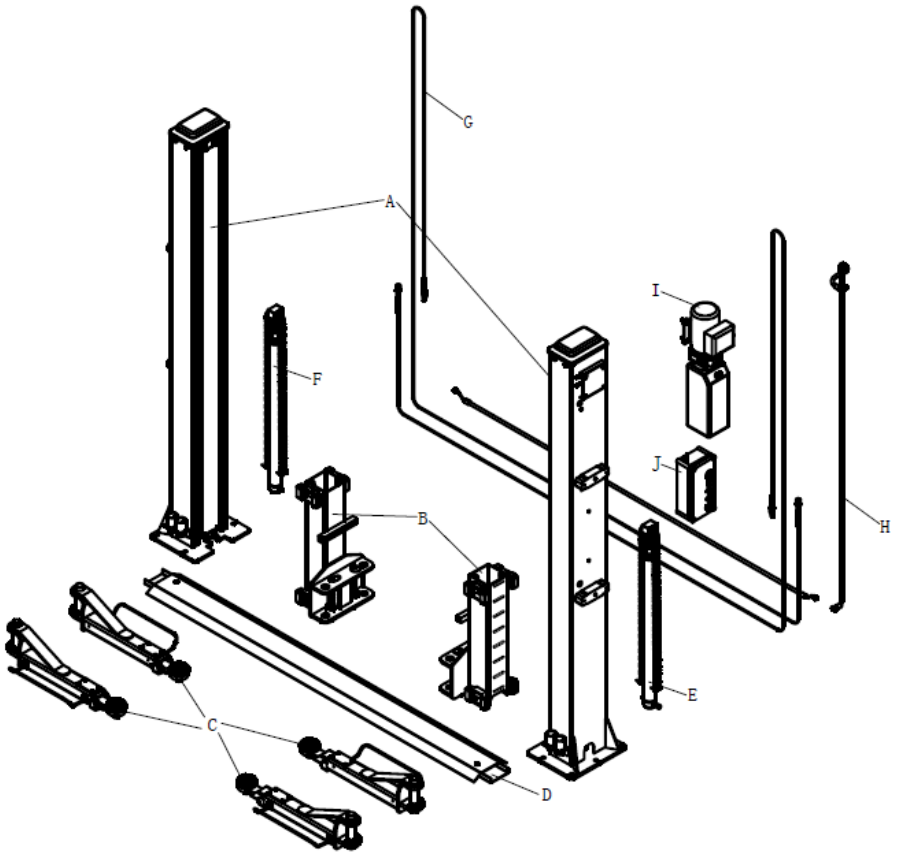

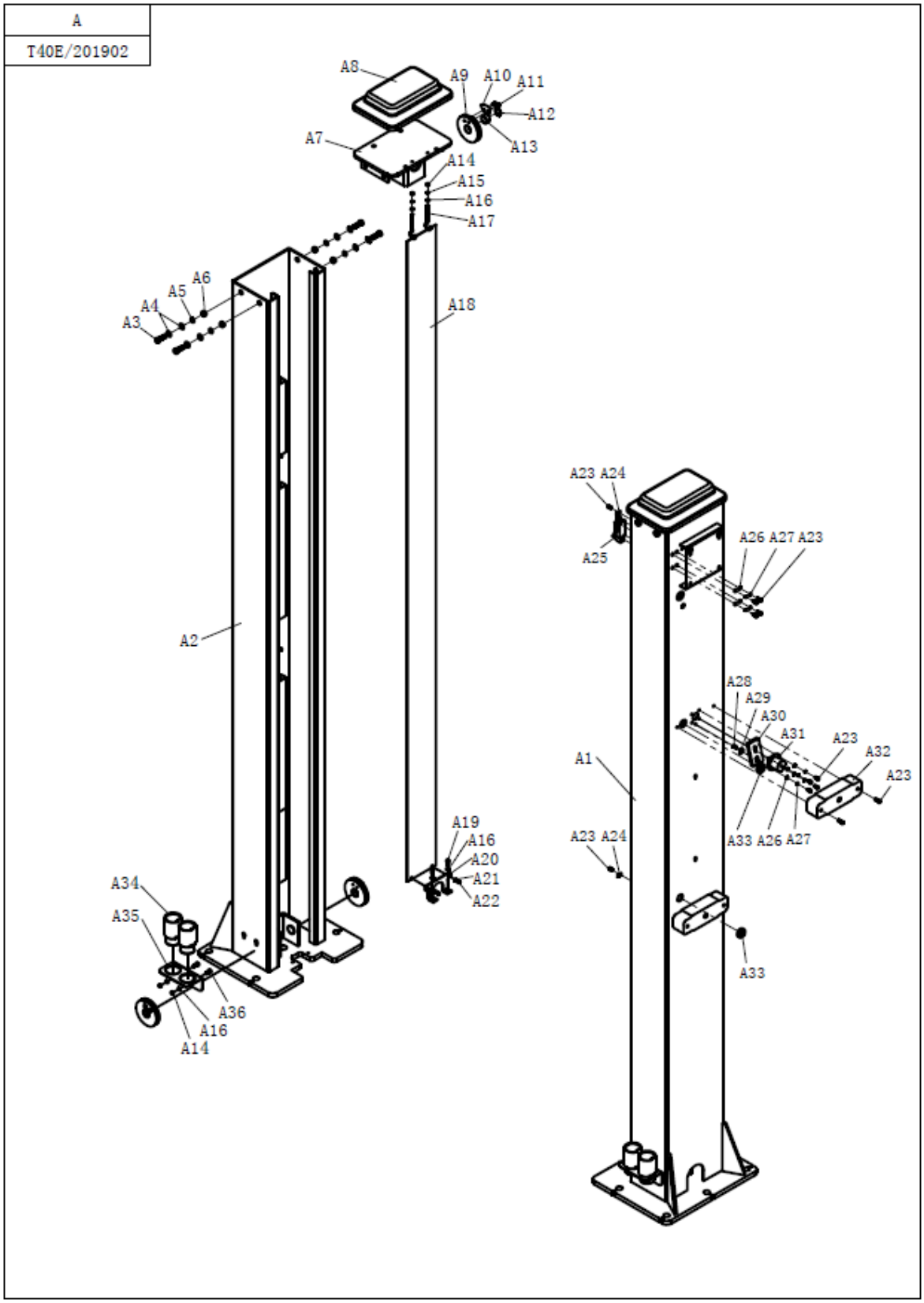
A
T40E/201902
A8
A9
A10
A11
A12
A13
A7
A14
A15
A16
A17
A6
A5
A4
A3
A18
A23 A24
A25
A26 A27 A23
A2
A28
A29
A30
A31
A23
A32
A23
A1
A19
A16
A20
A21
A22
A23 A24
A33 A26 A27
A34
A35
A36
A16
A14
A33

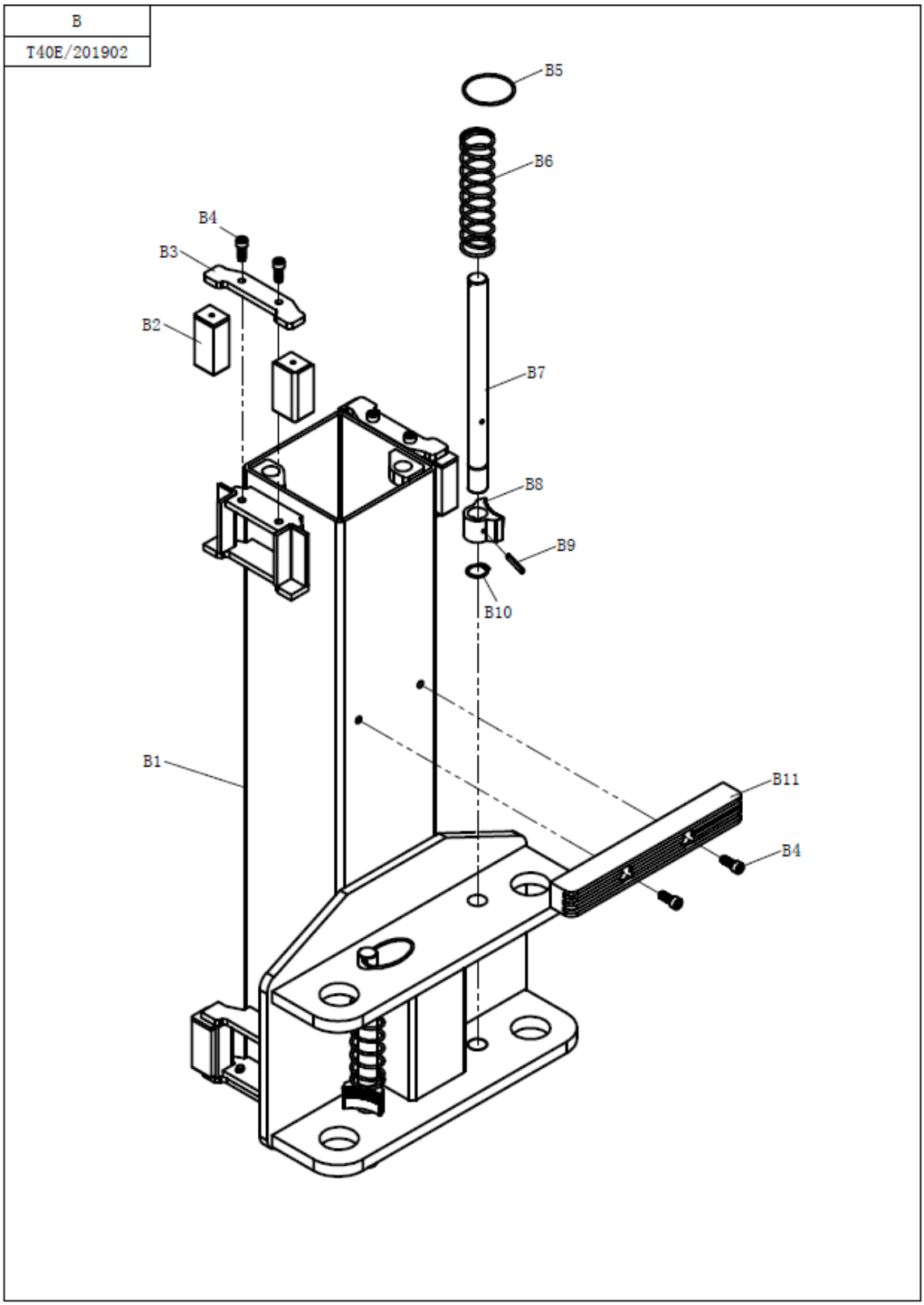
B
T40E/201902
B5
B6
B4
B3
B2
B7
B8
B9
B10
B1
B11
B4

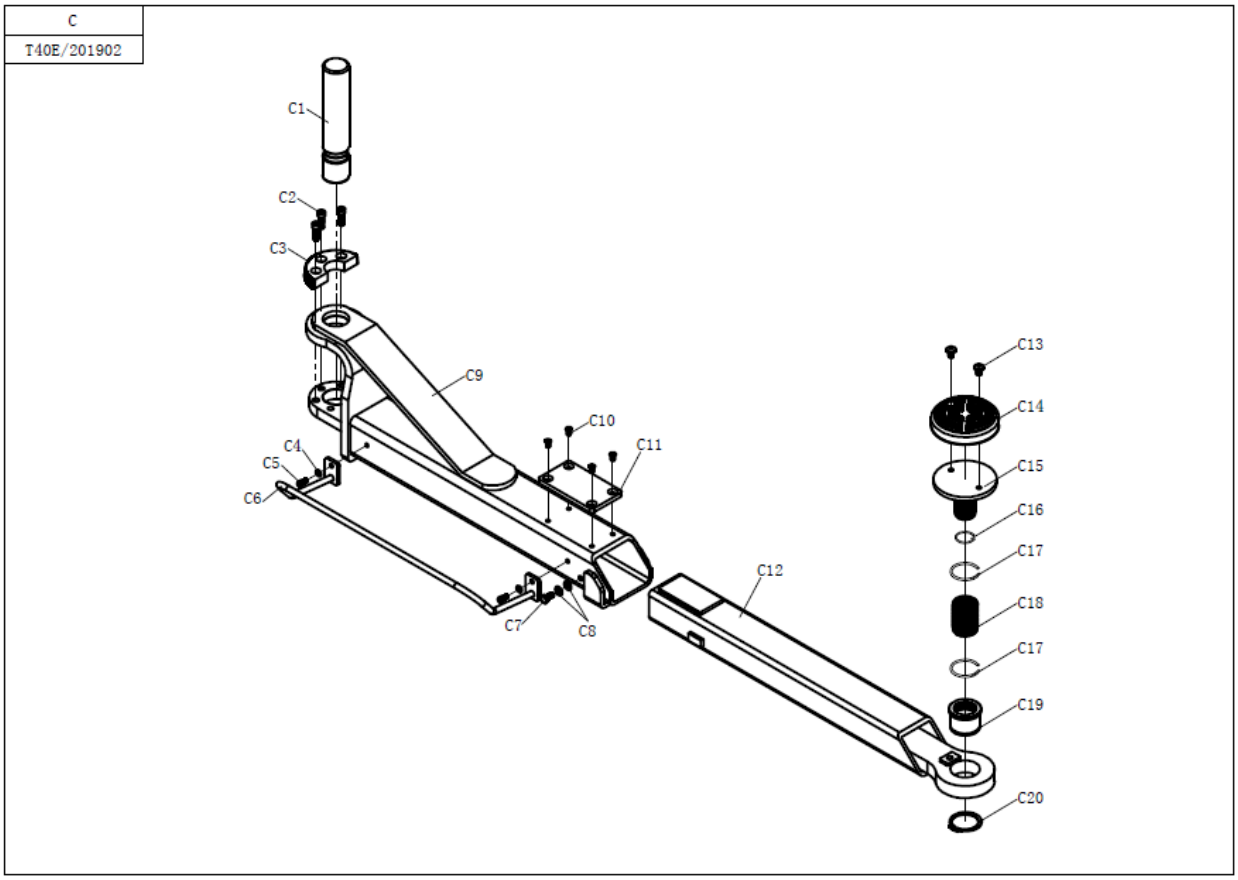
C
T40E/201902
C1
C2
C3
C9
C10
C11
C4
C5
C6
C7
C8
C12
C13
C14
C15
C16
C17
C18
C17
C19
C20

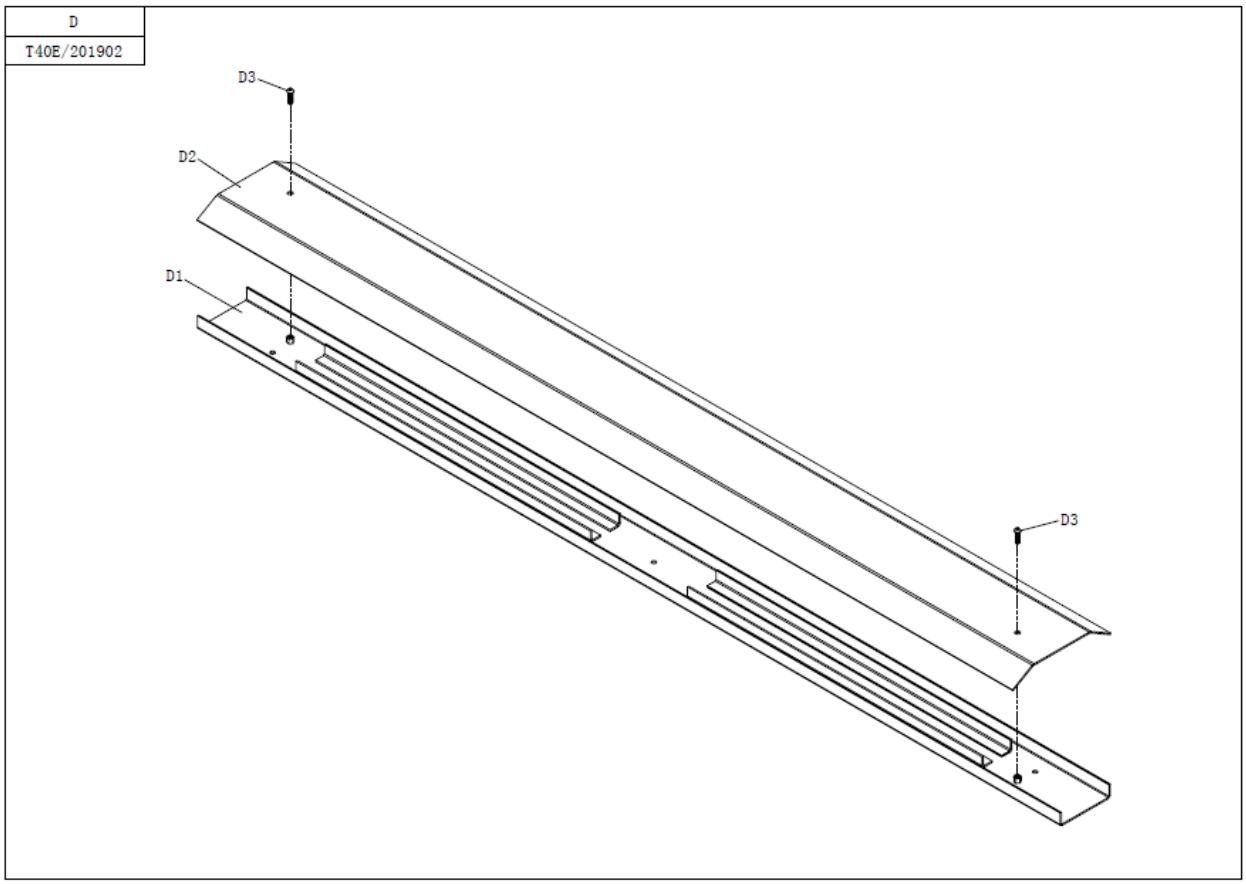
D
T40E/201902
D3
D2
D1
D3

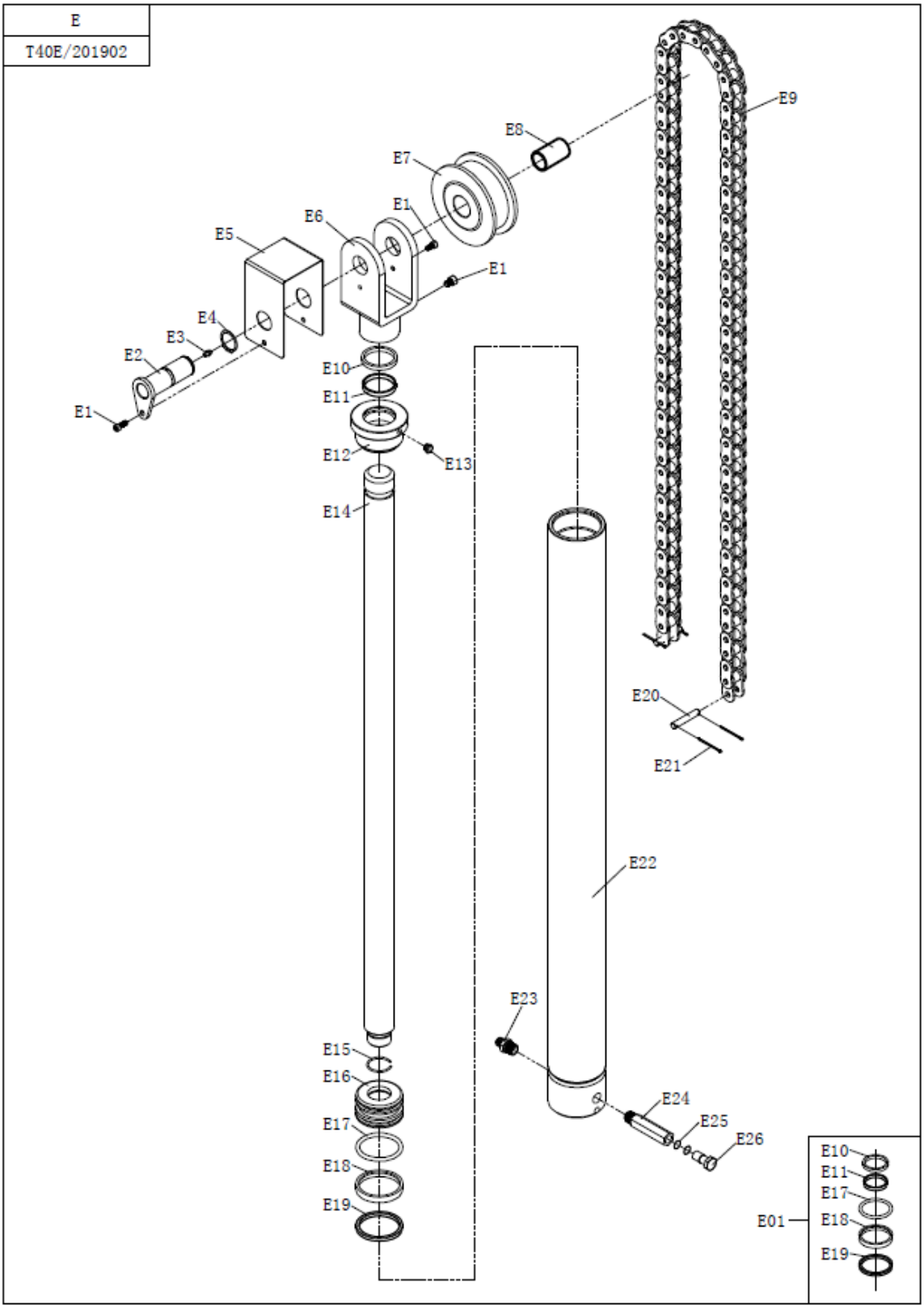
E
T40E/201902
E9
E8
E7
E1
E6
E5
E1
E4
E3
E2
E1
E10
E11
E12
E13
E14
E20
E21
E22
E23
E15
E16
E17
E18
E19
E24
E25
E26
E01
E10
E11
E17
E18
E19

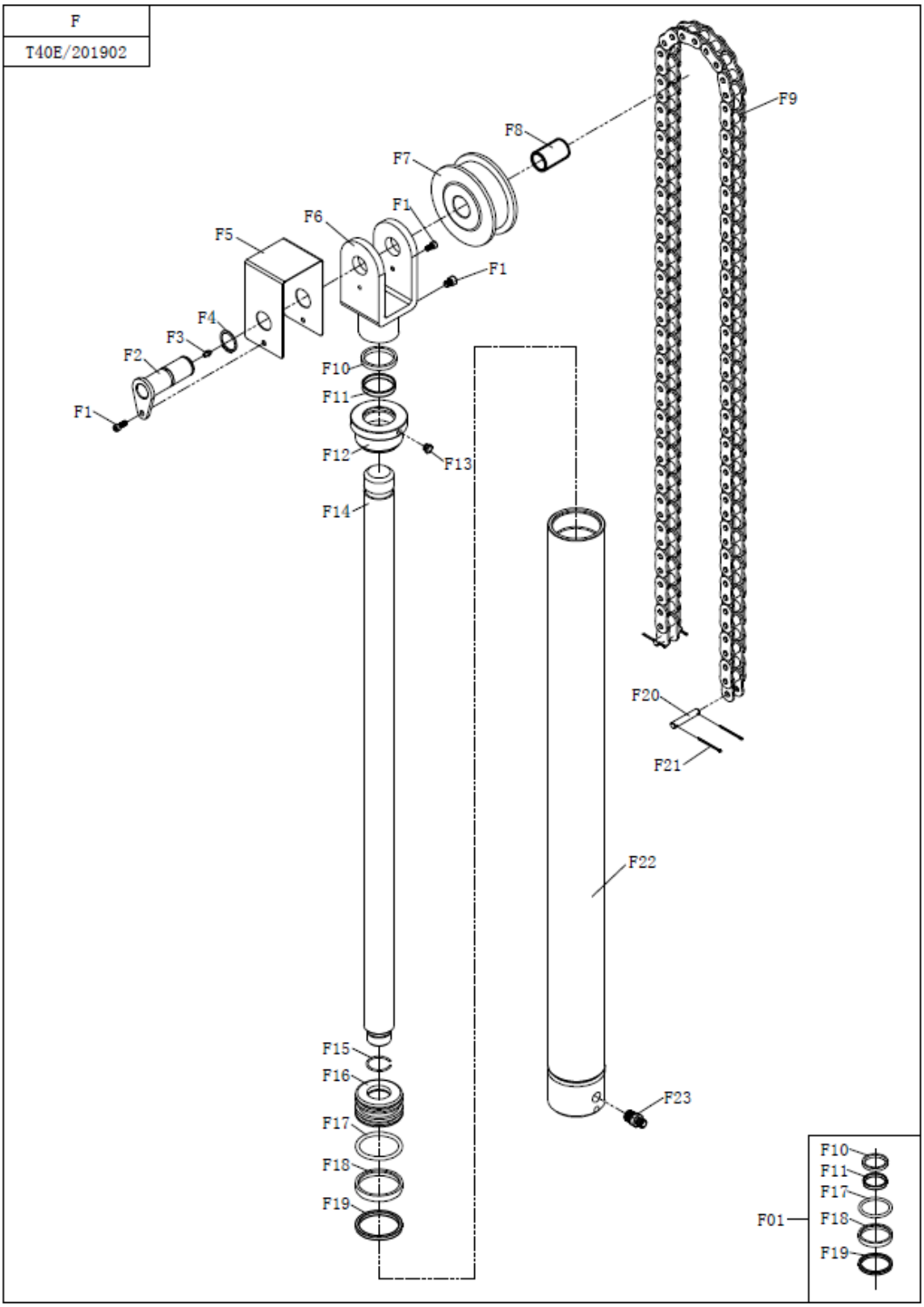
F
T40E/201902
F9
F8
F7
F1
F6
F5
F1
F4
F3
F2
F1
F10
F11
F12
F13
F14
F20
F21
F22
F15
F16
F23
F17
F18
F19
F01
F10
F11
F17
F18
F19

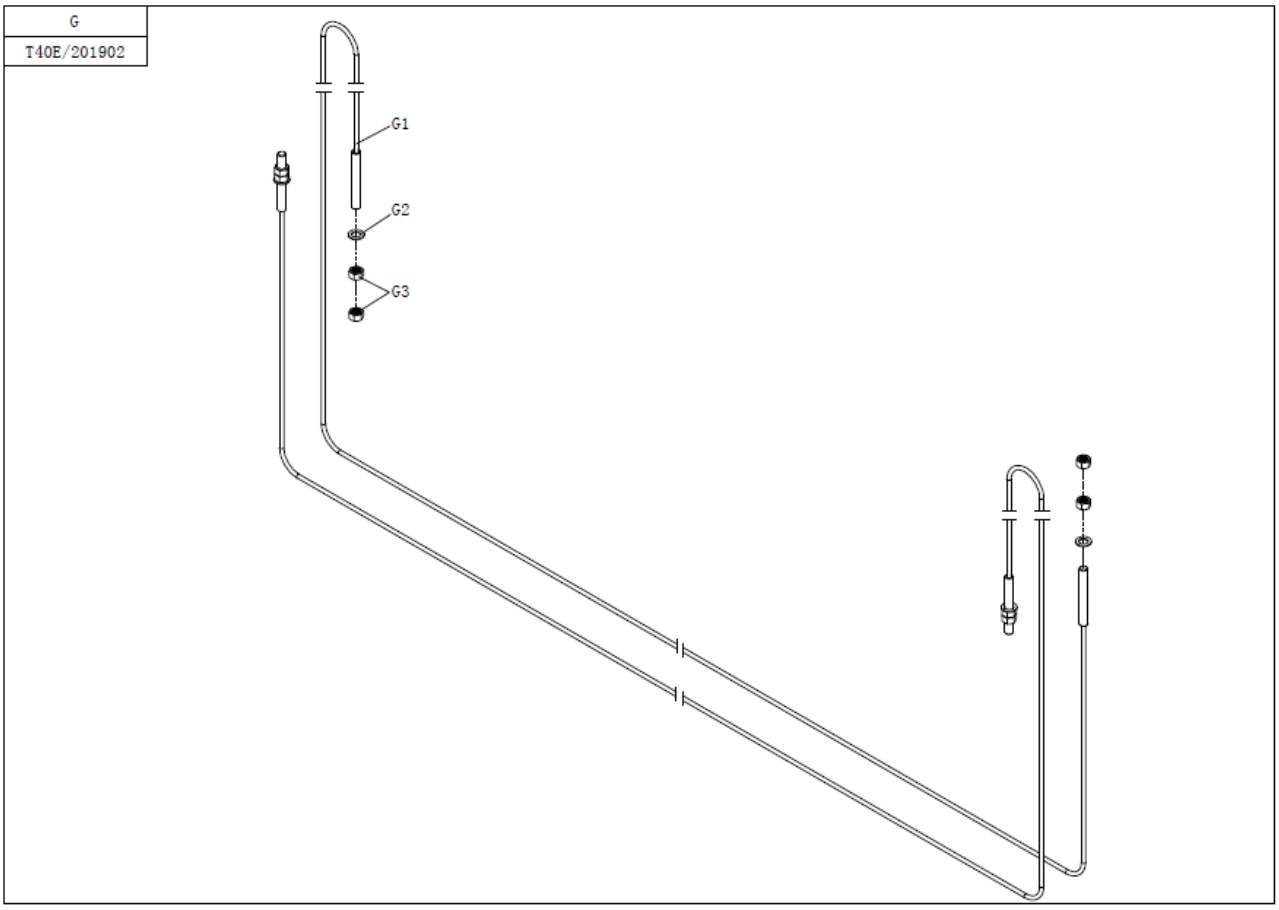
G
T40E/201902
G1
G2
G3

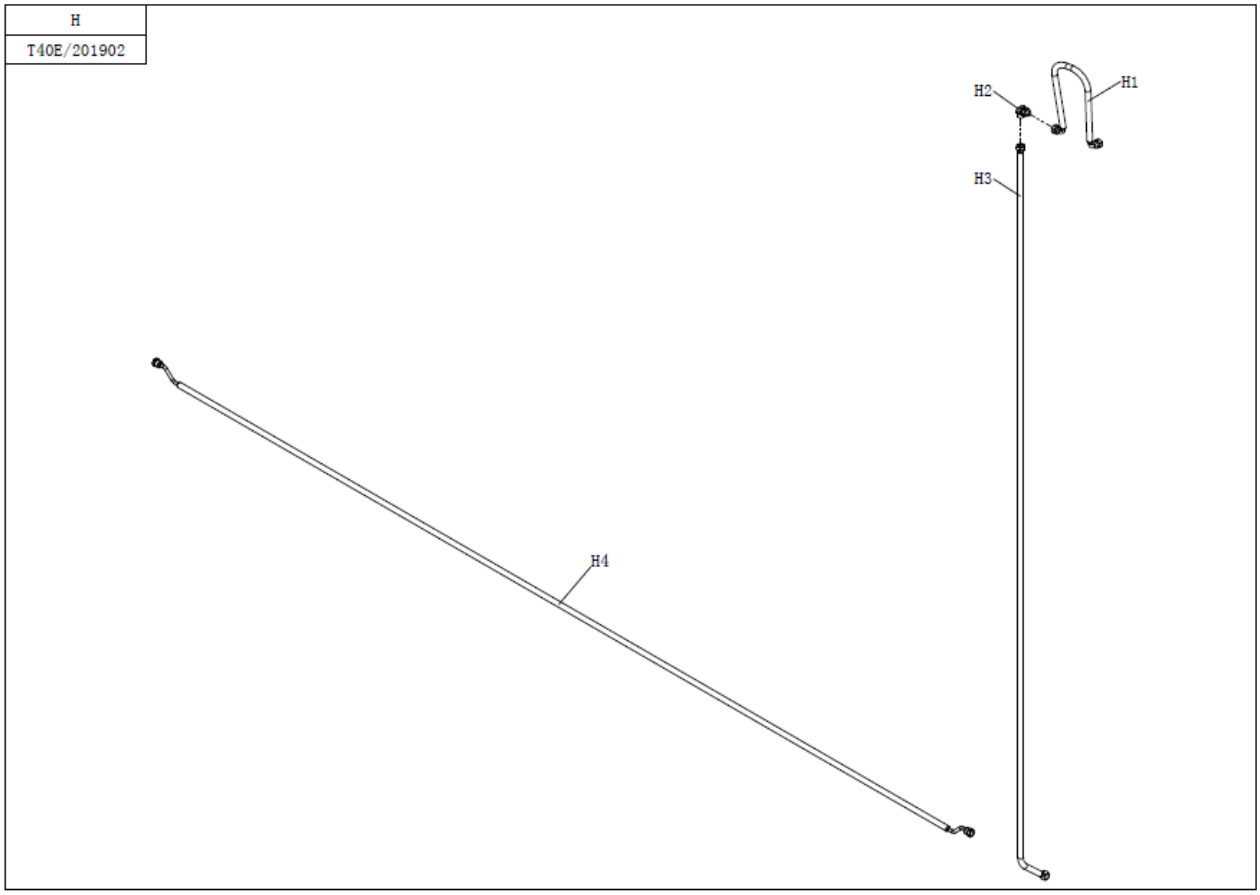
H
T40E/201902
H1
H2
H3
H4

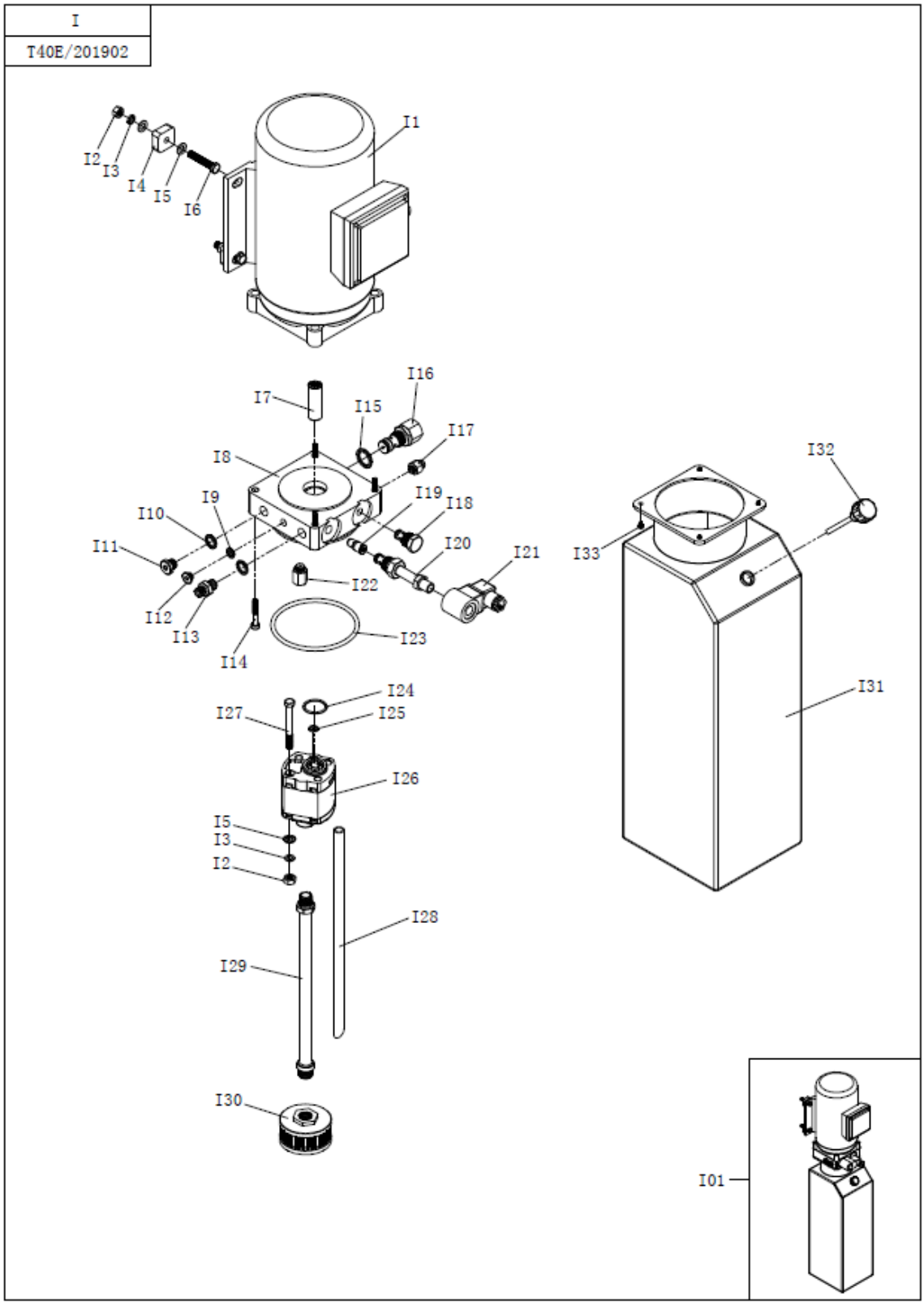
I
T40E/201902
I1
I2
I3
I4
I5
I6
I7
I8
I9
I10
I11
I12
I13
I14
I15
I16
I17
I18
I19
I20
I21
I22
I23
I24
I25
I26
I27
I28
I29
I30
I31
I32
I33
I01

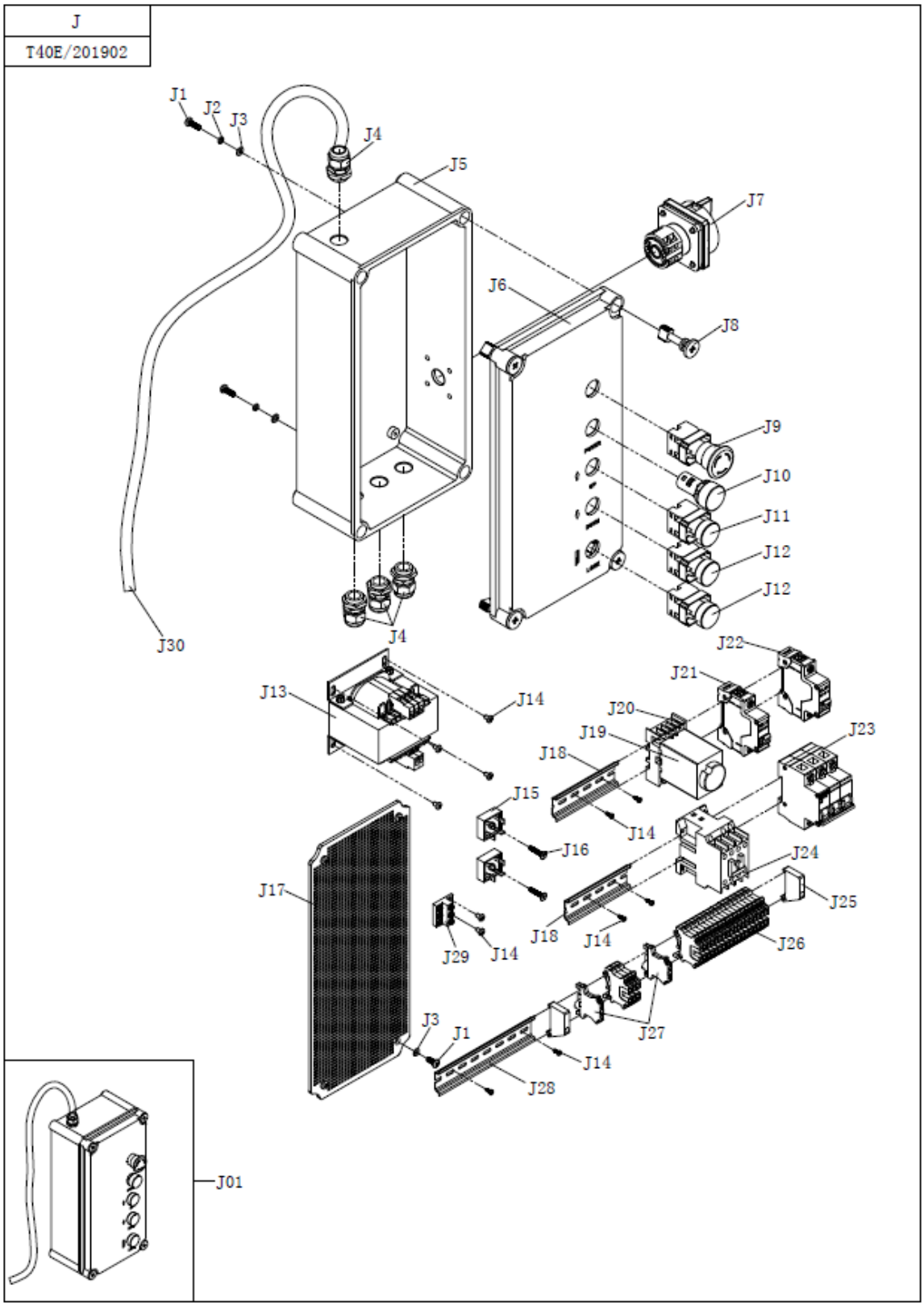
J
T40E/201902
J1
J2
J3
J4
J5
J7
J6
J8
J9
J10
J11
J12
J12
J30
J4
J22
J21
J13
J14
J20
J19
J23
J18
J15
J14
J16
J24
J17
J25
J18
J14
J29
J14
J26
J3
J1
J27
J14
J28
J01

A1	TZ-40E-010000-0	main column assembly
A2	TZ-40E-020000-0	sub column assembly
A3	B-014-100351-1	hexagon head bolt full thread M10×35
A4	B-040-112020-1	plain washer Ø10
A5	B-050-100000-0	spring washer Ø10
A6	B-004-100001-1	hexagon nut M10
A7	TZ-40E-070000-0	top plate assembly
A8	S-038-306221-0	column cap
A9	TX-40E-000200-0	roller
A10	TX-40E-001800-0	steel cable damper
A11	B-014-050101-1	hexagon head bolt full thread M5×10
A12	B-055-250001-0	circlip for shaft Ø25
A13	S-011-282515-0	shaft steel sleeve 282515
A14	B-004-060001-1	hexagon nut M6
A15	B-050-060000-0	spring washer Ø6
A16	B-040-061216-1	plain washer Ø6
A17	S-038-061200-0	dust cloth hanger
A18	S-038-270140-0	dust cloth
A19	B-010-060121-0	hexagon socket head cap screw M6×12
A20	TZ-40E-002100-0	dust cloth fixed plate
A21	B-040-051010-1	plain washer Ø5
A22	B-024-050061-0	cross recessed pan head screw M5×6
A23	B-024-050121-0	cross recessed pan head screw M5×12
A24	S-038-060000-0	unilateral card Ø6
A25	S-060-008104-1	limit switch
A26	B-050-050000-0	spring washer Ø5
A27	B-040-051010-1	plain washer Ø5
A28	B-024-050161-1	cross recessed pan head screw M5×16
A29	TX-40E-000600-0	small insurance block
A30	TX-40E-000500-0	insurance block
A31	L-070-DC24V0-1	electromagnet MQZ2-10
A32	TG-40E-000300-0	decorate box
A33	D-079-201612-1	coil 26
A34	TG-TEH-000070-1	higher column 70mm
A35	TZ-40E-001300-0	higher column support
A36	B-012-060200-0	cup head square neck bolt with large head M6×20
B1	TZ-40E-030000-0	carriage assembly
B2	TG-40E-000100-0	slider
B3	TX-40E-003100-0	slider press plate
B4	B-010-080201-0	hexagon socket head cap screw M8×20
B5	B-056-025601-0	key ring
B6	TG-TEH-000900-0	locking shaft spring
B7	TZ-40E-000700-0	locking shaft
B8	S-030-123456-3	semi-circle block（small）

B9	B-071-005035-0	spring-type straight pin Ø5×35
B10	B-055-220001-0	circlip for shaft Ø22
B11	S-420-285035-0	protection rubber mat
C1	TZ-40E-000400-0	arm pin
C2	B-010-100251-0	hexagon socket head cap screw M10×25
C3	S-030-123456-2	semi-circle block（big）
C4	B-040-061216-1	plain washer Ø6
C5	B-010-060121-0	hexagon socket head cap screw M6×12
C6	TZ-40E-090000-0	lifting arm guardrail assembly
C7	B-014-080161-1	hexagon head bolt full thread M8×16
C8	B-040-091616-1	plain washer Ø8
C9	TZ-40E-050000-0	outside lifting arm assembly
C10	B-017-060121-0	cross recessed countersunk head screw M6×10
C11	TG-40E-001600-0	arm rubber mat
C12	TZ-40E-040000-0	inside lifting arm assembly
C13	B-010-080121-1	hexagon socket button head screw M8×12
C14	S-013-107000-1	rubber mat Ø115
C15	/	support cushion screw rod
C16	/	steel cable for shaft Ø25
C17		steel cable for shaft Ø35
C18	/	support cushion screw sleeve
C19	/	support cushion screw seat
C20	B-055-500001-0	circlip for shaft Ø50
D1	TZ-40E-060000-0	oil hose slot board assembly
D2	TZ-40E-001700-0	oil hose cover
D3	B-012-100400-0	hexagon socket button head screw M10×35
E1	B-010-060121-0	hexagon socket head cap screw M6×12
E2	TX-40E-240000-0	chain roller shaft assembly
E3	S-023-000006-0	grease nipple M6
E4	B-055-250001-0	circlip for shaft Ø25
E5	TX-40E-001200-0	chain beffle
E6	C-030-T40000-20	chain roller support assembly
E7	TG-40E-001000-0	chain roller
E8	S-011-282545-0	shaft steel sleeve 282545
E9	S-300-LH1244-0	plate chain
E10	C-030-T40000-16	dust-proof ring Ø38×46×6.5
E11	/	wear ring Ø38×6×2
E12	/	oil cylinder cover
E13	/	muffler
E14	/	piston rod
E15	/	steel cable circlip for hole Ø30
E16	/	piston
E17	C-030-T40000-17	O-ring Ø63×5.7
E18	/	wear ring Ø63×10×2.5

E19	C-030-T40000-19	U-ring Ø63×53×6
E20	/	chain fixing shaft
E21	/	split pin Ø2.5×40
E22	/	main oil cylinder assembly
E23	S-011-141938-0	oil hose straight joint inner cone G1/4--R3/8
E24	S-020-G14R14-1	safety valve joint inner thread G1/4--R3/8 57mm
E25	B-042-220001-0	combined sealing washer Ø14
E26	S-020-720110-3	english hinged bolt G1/4
E01	C-030-T40000-02	oil cylinder seal kit
F1	B-010-060121-0	hexagon socket head cap screw M6×12
F2	TX-40E-240000-0	chain roller shaft assembly
F3	S-023-000006-0	grease nipple M6
F4	B-055-250001-0	circlip for shaft Ø25
F5	TX-40E-001200-0	chain beffle
F6	C-030-T40000-20	chain roller support assembly
F7	TG-40E-001000-0	chain roller
F8	S-011-282545-0	shaft steel sleeve 282545
F9	S-300-LH1244-0	plate chain
F10	C-030-T40000-16	dust-proof ring Ø38×46×6.5
F11	/	wear ring Ø38×6×2
F12	/	oil cylinder cover
F13	/	muffler
F14	/	piston rod
F15	/	steel cable circlip for hole Ø30
F16	/	piston
F17	C-030-T40000-17	O-ring Ø63×5.7
F18	/	wear ring Ø63×10×2.5
F19	C-030-T40000-19	U-ring Ø63×53×6
F20	/	chain fixing shaft
F21	/	split pin Ø2.5×40
F22	/	sub oil cylinder assembly
F23	S-020-G14R38-1	safety valve joint inner thread G1/4--R3/8
F01	C-030-T40000-02	oil cylinder seal kit
G1	TZ-40E-080000-0	steel cable assembly
G2	B-040-173030-1	plain washer Ø16
G3	B-004-160001-0	hexagon nut M16
H1	Q-40E-000300-0	high-pressure oil pipe 300mm
H2	S-020-JT105L-1	oil hose baffle elbow joint inner cone 2-G1/4
H3	Q-40E-002380-0	high-pressure oil pipe 2390mm
H4	Q-40E-002720-0	high-pressure oil pipe 2720mm
I1	S-052-380050-3	3ph motor
I1(optional)	S-052-220060-3	1ph motor
I2	B-004-080001-1	hexagon nut M8

I3	B-050-080000-0	spring washer Ø8
I4	TG-TEH-001800-0	motor cushion
I5	B-040-091616-1	plain washer Ø8
I6	B-014-080351-0	hexagon head bolt full thread M8×45
I7	S-048-000019-G	coupling
I8	S-048-000012-7	center valve socket
I9	B-042-080001-0	combined sealing washer Ø8
I10	B-042-220001-0	combined sealing washer Ø14
I11	S-048-000022-G	plug G1/4
I12	S-048-000027-G	plug M8×1
I13	S-011-010400-12	oil pipe straight union inner cone G1/4--end face G1/4
I14	/	hexagon socket head cap screw M6×40
I15	S-048-000025-G	combined sealing washer Ø20
I16	S-048-000004-Z	overflow valve
I17	S-048-000026-G	plug G3/8
I18	/	one-way valve
I19	S-047-000250-0	balance valve
I20	S-048-000002-J	normally closed solenoid valve element
I21	S-048-000012-J	normally closed solenoid valve coil
I22	S-048-000020-G	cushion valve
I23	S-048-000033-G	O-ring Ø109×5.3
I24	S-048-000030-G	O-ring Ø32×2.4
I25	S-048-000031-G	rectangle seal ring Ø9.5×1.7
I26	S-056-220000-0	gear pump
I26(optional)	S-048-000021-1	gear pump
I27	B-010-080801-0	hexagon socket head cap screw M8×80
I28	/	return tube
I29	/	suction tube
I30	S-048-000010-G	filter
I31	S-016-080000-0	oil tank
I32	S-304-060400-0	oil tank cap
I33	/	hexagon flange bolt M5×18
I01	S-058-380027-0	power unit assembly
I01(optional)	S-058-240021-0	power unit assembly
J1	B-024-050121-0	cross recessed pan head screw M5×12
J2	B-050-050000-0	spring washer Ø5
J3	B-040-051010-1	plain washer Ø5
J4	D-036-000135-0	cable screw joint
J5	/	control box body
J6	/	control box cover
J7	S-060-262004-1	power switch
J8	/	locking screw
J9	S-060-039011-1	emergency stop switch

J10	D-090-024022-0	signal
J11	S-060-150011-0	button switch 1NO1NC
J12	S-060-130020-0	button switch 2NO
J13	S-052-150000-3	transformer
J14	B-021-040010-0	cross recessed pan head tapping screw ST4.2×9.5
J15	H-030-200013-5	rectifier bridge
J16	B-019-420161-0	cross recessed countersunk head tapping screw ST4.2×25
J17	/	power panel
J18	D-101-091000-0	lead rail
J19	H-030-010020-1	time relay
J20	H-030-010020-2	relay socket
J21	D-100-C021P0-0	circuit breaker
J22	D-100-C101P0-0	circuit breaker
J23	D-100-C202P0-0	circuit breaker 3phase
J23(optional)	D-100-C252P0-0	circuit breaker 1phase
J24	H-030-050011-2	AC contactor
J25	D-073-UK25B0-D	fixed terminal
J26	D-073-UK25B0-0	phoenix terminal
J27	D-073-SV1250-5	earth terminal
J28	D-101-091000-0	lead rail
J29	D-073-010203-0	grounding strip
J30	D-078-030150-CE	three-phase power wire
J30(optional)	D-078-020150-3	single phase power wire
J01	TA-T40-001600-W	control box complete

15. Circuit diagram